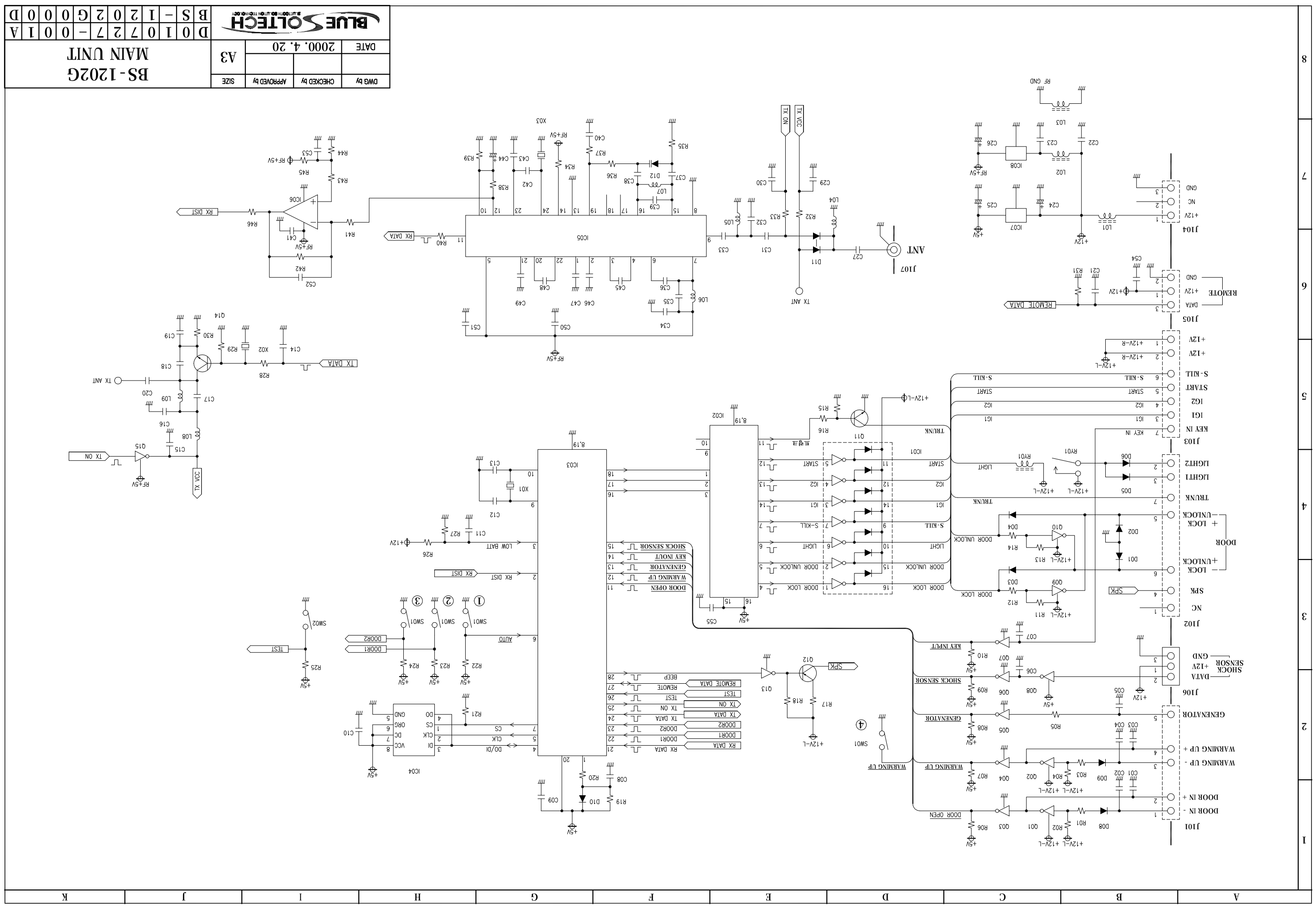
BS-1202G
MAIN UNIT
A3
DATE 2000. 4. 20
DWG by
CHECKED by
APPROVED by
SIZE
BLUE SOLTECH
D01727-001A
BS-1202G0000D
J101
J102
J103
J104
J105
J106
J107
ANT
IC03
IC04
IC05
IC06
IC07
IC08
IC01
IC02
TX ANT
RF GND
RF+5V
TX DATA
TX ON
TX VCC
TX ON
RX DATA
RX DIST
LOW BATT
DOOR OPEN
WARMING UP
GENERATOR
SHOCK SENSOR
KEY INPUT
REMOTE DATA
TEST
DOOR1
DOOR2
AUTO
SPK
BEEP
TRUNK
LIGHT
START
S-KILL
IG1
IG2
KEY IN
DOOR LOCK
DOOR UNLOCK
+12V-L
+12V-R
+12V
+5V
32.768 KHz