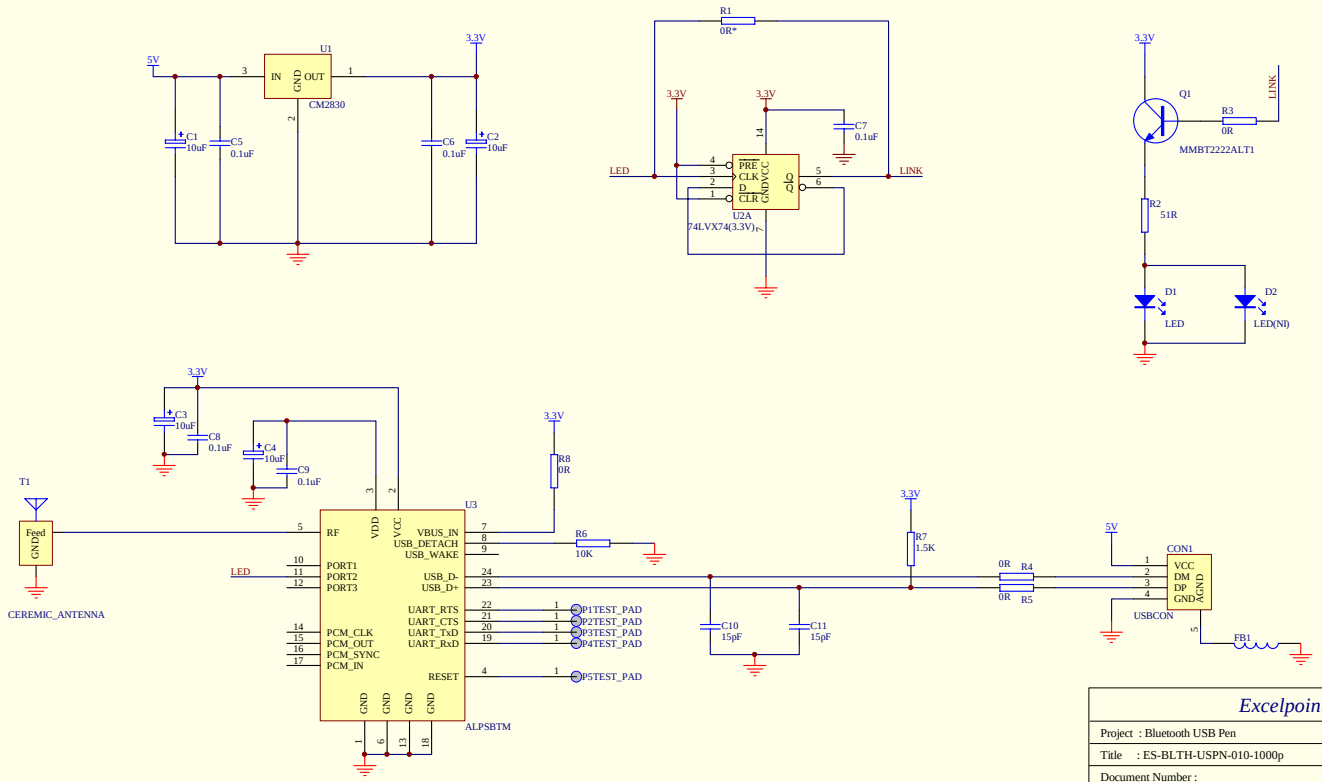

Excelpoint systems (PTC) Ltd.		
Project : Bluetooth USB Pen		
Title : ES-BLTH-USPN-010-1000p		
Document Number :	Rev :	Size: A3
Date :	Sheet of	
Drawn by :	Checked by :	Approved by :