REVISIONS					
ECN	ZONE	REV	DESCRIPTION	DATE	APPROVED
		A	Release		

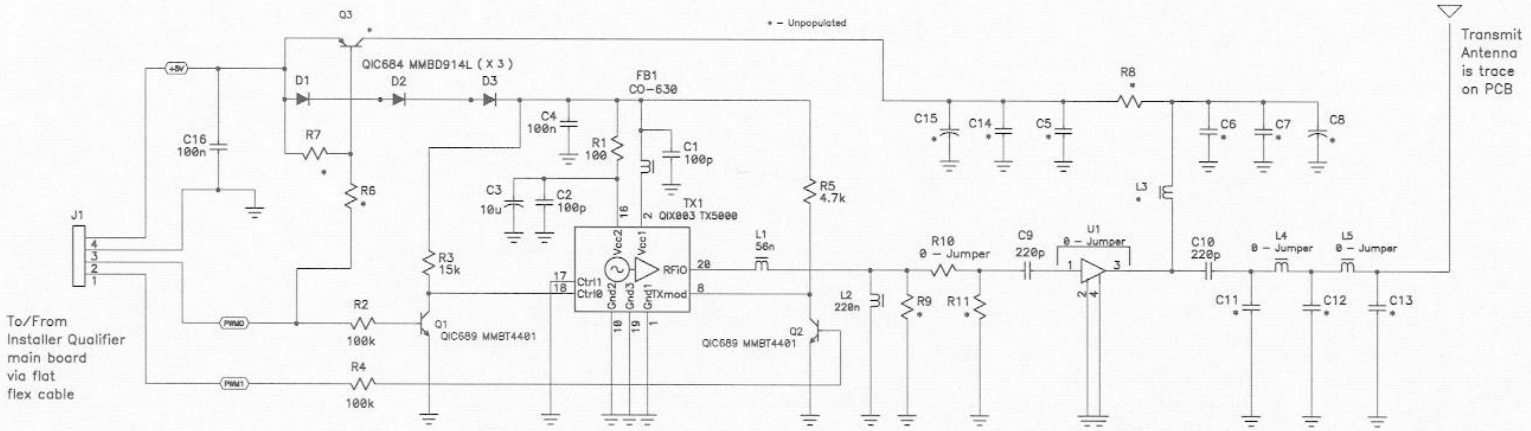

THIS DOCUMENT IS THE PROPERTY OF COMSONICS INC. ITS USE IS AUTHORIZED ONLY FOR RESPONDING TO A REQUEST FOR QUOTATION OR FOR THE PERFORMANCE OF WORK FOR COMSONICS. ALL QUESTIONS MUST BE REFERRED TO THE COMSONICS PURCHASING DEPARTMENT.

SIGNATURES		DATE
DR	GHM	09-02
CHK		
ENG	GHM	09-02
MKTG		
APPD		

COMSONICS, INCORPORATED
1350 PORT REPUBLIC RD
HARRISONBURG, VA 22801
(540) 434-5965

Title: Qualifier Baby Board

Size	DWG NO.	Doc	Rev
A	S101266		A

SCALE:

Sheet one of one