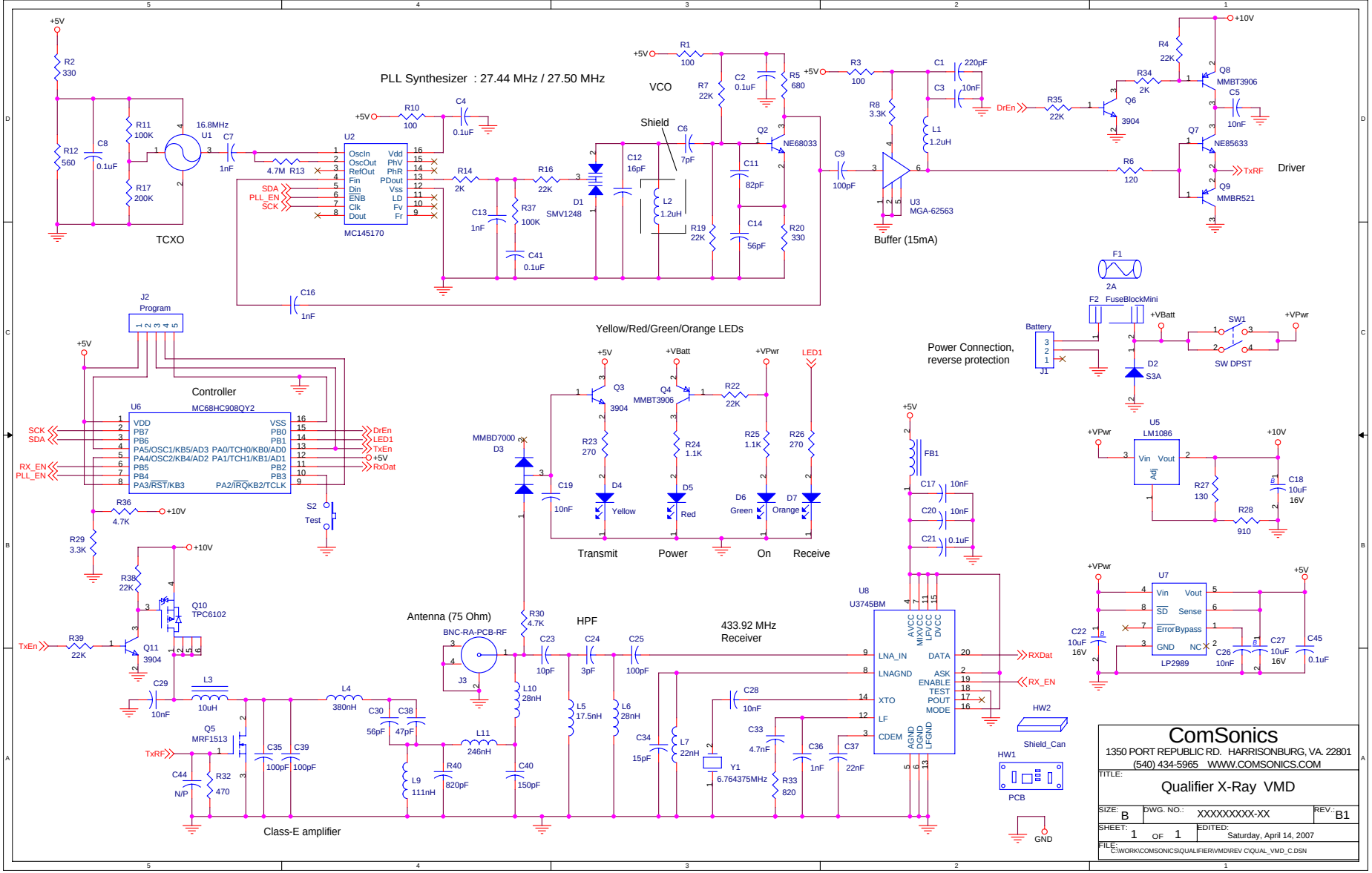
PLL Synthesizer : 27.44 MHz / 27.50 MHz
VCO
Shield
TCXO
16.8MHz
U1
U2
MC145170
OscIn
OscOut
RefOut
Fin
Din
ENB
Clk
Dout
Vdd
PhV
PhR
PDout
Vss
LD
Fv
Fr
SDA
PLL_EN
SCK
NE68033
SMV1248
U3
MGA-62563
Buffer (15mA)
DrEn
TxRF
Driver
Q8
MMBT3906
Q7
NE85633
Q9
MMBR521
Q6
3904
F1
2A
F2 FuseBlockMini
Battery
J1
+VBatt
SW1
SW DPST
+VPwr
D2
S3A
Power Connection,
reverse protection
J2
Program
Controller
U6
MC68HC908QY2
VDD
PB7
PB6
PA5/OSC1/KB5/AD3
PA4/OSC2/KB4/AD2
PB5
PB4
PA3/RST/KB3
VSS
PB0
PB1
PA0/TCH0/KB0/AD0
PA1/TCH1/KB1/AD1
PB2
PB3
PA2/IRQKB2/TCLK
RX_EN
LED1
TxEn
RxDat
S2
Test
Yellow/Red/Green/Orange LEDs
Transmit
Power
On
Receive
Yellow
Red
Green
Orange
MMBD7000
D3
U5
LM1086
Vin
Vout
Adj
U7
LP2989
SD
Sense
ErrorBypass
GND
NC
U8
U3745BM
AVCC
MIXVCC
LPVCC
DVCC
LNA_IN
LNAGND
XTO
LF
CDEM
AGND
DGND
LFGND
DATA
ASK
ENABLE
TEST
POUT
MODE
Antenna (75 Ohm)
BNC-RA-PCB-RF
J3
HPF
433.92 MHz
Receiver
Y1
6.764375MHz
Class-E amplifier
Q10
TPC6102
Q11
3904
Q5
MRF1513
HW2
Shield_Can
HW1
PCB
GND
ComSonics
1350 PORT REPUBLIC RD. HARRISONBURG, VA. 22801
(540) 434-5965 WWW.COMSONICS.COM
TITLE:
Qualifier X-Ray VMD
SIZE: B
DWG. NO.: XXXXXXXXX-XX
REV.: B1
SHEET: 1 OF 1
EDITED: Saturday, April 14, 2007
FILE: C:\WORK\COMSONICS\QUALIFIER\VMD\REV C\QUAL_VMD_C.DSN