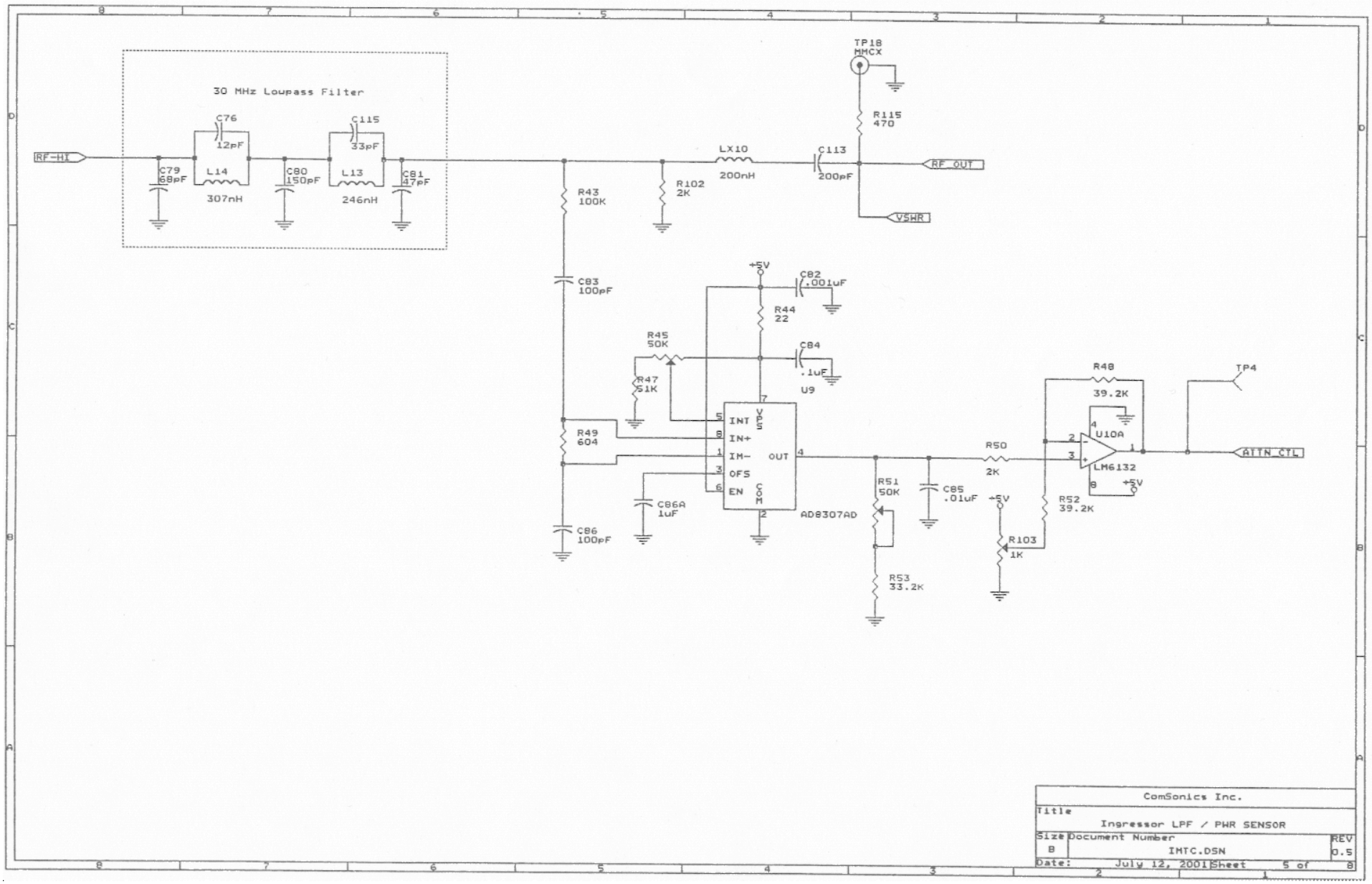

ComSonics Inc.	
Title: Ingressor LPF / PWR SENSOR	
Size: B	Document Number: IMTC.DSN
REV: 0.5	
Date: July 12, 2001	Sheet 5 of 8