REV. 更改	DESCRIPTION 說明	ENG. 修改人	APPROVAL 審核

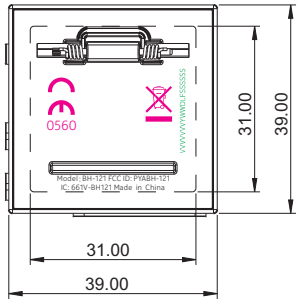

RoW

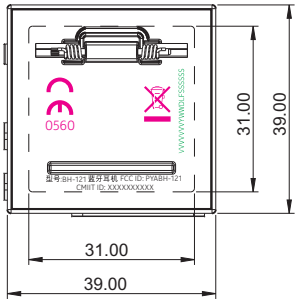

China

TYPE FONTS

Latin text:	Nokia Pure Headline Light 4pt
Chinese text:	Arial MS Unicode Regular 4pt
Serial:	Nokia Pure Text Light 4pt

NOTE:

1. All markings will be done in laser drawing.
2. SN FORMAT: VVVVVVVYWWDLFSSSSSS
   VVVVVVV is a product code (7 digits) assigned by Nokia SEE TABLE 1
   Y is a code for manufacturing year(2=2012,3=2013,4=2014,etc)
   WW is a code for manufacturing week(01~53)
   D is a code for manufacturing day of the week (1=Monday, 2=Tuesday, etc)
   L is code for production line(1,2,3,...9,A,B,C,...Z)
   F is code for factory(1,2,3,...9,A,B,C,...Z) LW factory code is "1", JZ factory code is "6"
   S is code for supplier(1,2,3,...9,A,B,C,...Z) supplier code is "8"
   SSSSS (5 digits) is a running number restarting from "00000" every day.
   When required starting digit can be specified separately(e.g."30001")
3. Product Must Be Halogen Free

Requirement of PRIMAX Green Part:

1. Comply with PRIMAX QW-5Q002"Green Product Chemical Substances Specification".
2. Follow customer's specification as required.
3. Follow Halogen- Free requirement : Br<900 ppm, Cl<900 ppm, Br+Cl< 1500 ppm if required

THIS DRAWING MAY BE USED IN WHOLE OR PART