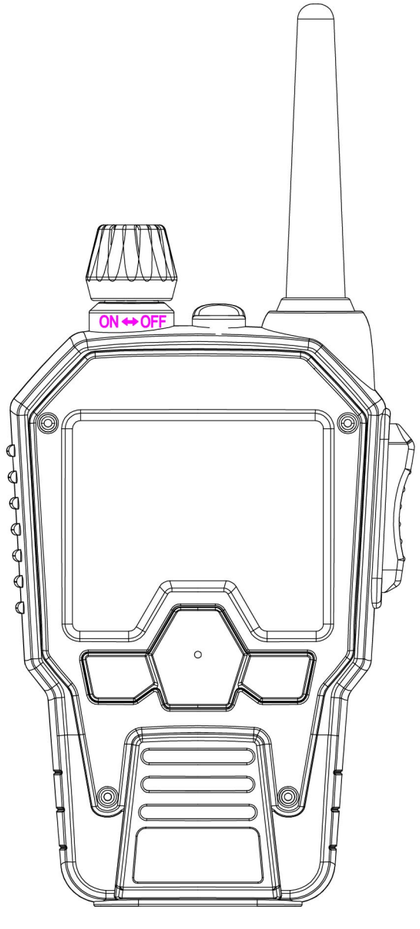
ON ⇔ OFF

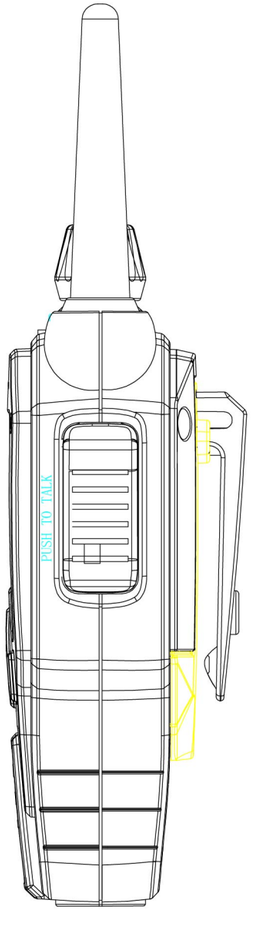
PUSH TO TALK

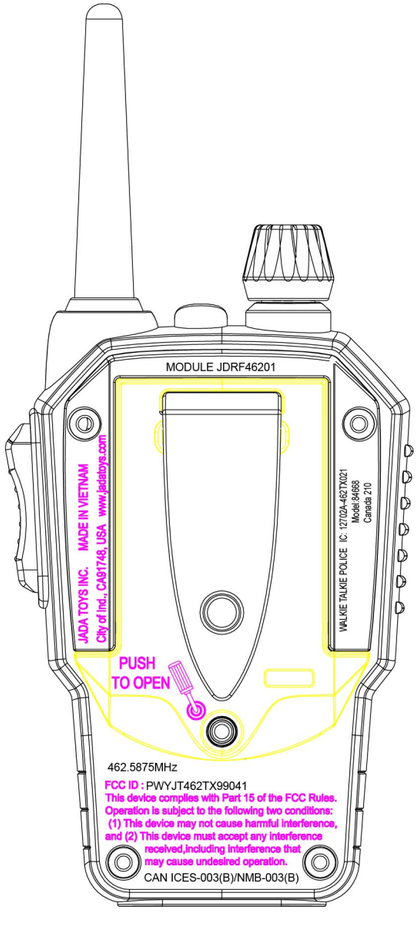
MODULE JDRF46201
JADA TOYS INC. MADE IN VIETNAM
City of Ind., CA91748, USA www.jadatoys.com
VALKIE TALKIE POLICE IC: 12702A-462TX021
Model: 65052
Canada 210
PUSH
TO OPEN
462.5875MHz
FCC ID : PWYJT462TX99041
This device complies with Part 15 of the FCC Rules.
Operation is subject to the following two conditions:
(1) This device may not cause harmful interference,
and (2) This device must accept any interference
received,including interference that
may cause undesired operation.
CAN ICES-003(B)/NMB-003(B)

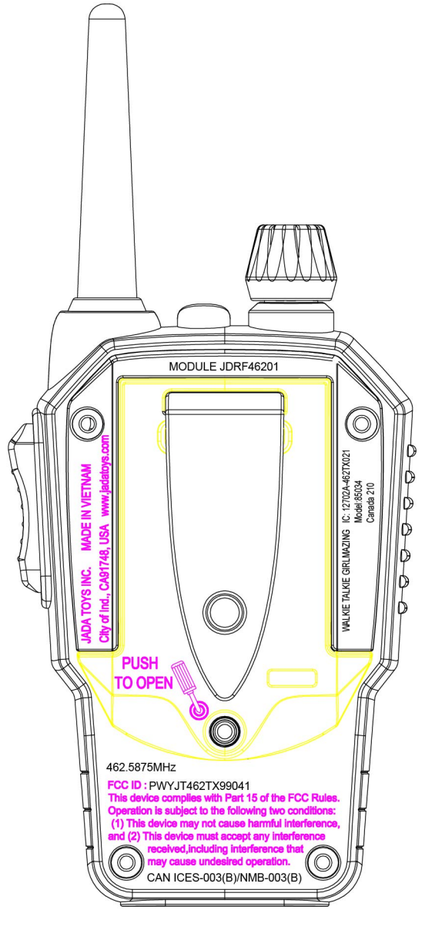
MODULE JDRF46201
JADA TOYS INC. MADE IN VIETNAM
City of Ind., CA91748, USA www.jadatoys.com
VALKIE TALKIE GIRLMAZING IC: 12702A-462TX021
Model: 65054
Canada 210
PUSH
TO OPEN
462.5875MHz
FCC ID : PWYJT462TX99041
This device complies with Part 15 of the FCC Rules.
Operation is subject to the following two conditions:
(1) This device may not cause harmful interference,
and (2) This device must accept any interference
received,including interference that
may cause undesired operation.
CAN ICES-003(B)/NMB-003(B)

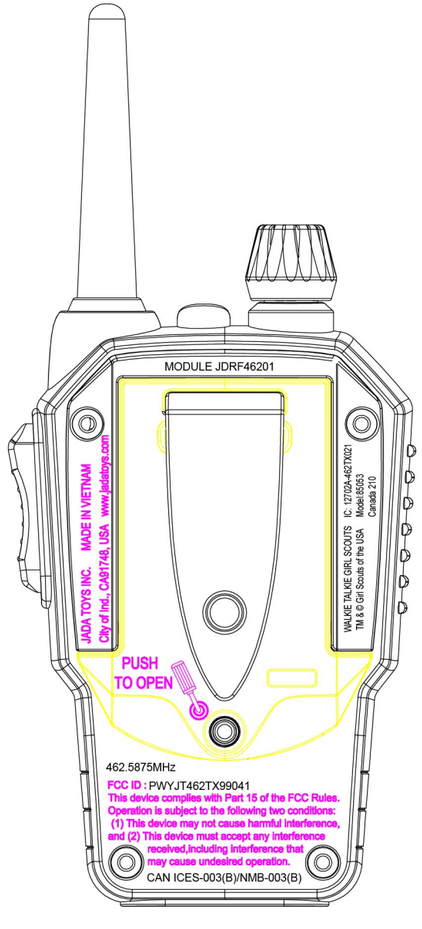
MODULE JDRF46201
JADA TOYS INC. MADE IN VIETNAM
City of Ind., CA91748, USA www.jadatoys.com
VALKIE TALKIE GIRL SCOUTS IC: 12702A-462TX021
TM & © Girl Scouts of the USA Model:65053
Canada 210
PUSH
TO OPEN
462.5875MHz
FCC ID : PWYJT462TX99041
This device complies with Part 15 of the FCC Rules.
Operation is subject to the following two conditions:
(1) This device may not cause harmful interference,
and (2) This device must accept any interference
received,including interference that
may cause undesired operation.
CAN ICES-003(B)/NMB-003(B)

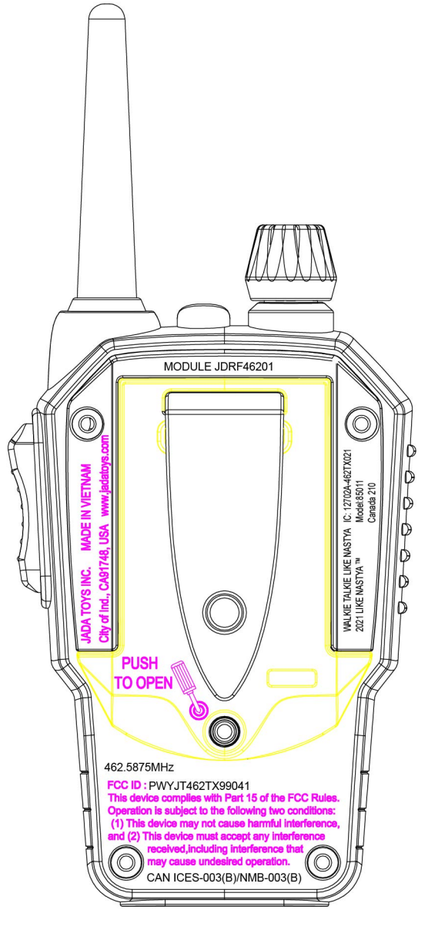
MODULE JDRF46201
JADA TOYS INC. MADE IN VIETNAM
City of Ind., CA91748, USA www.jadatoys.com
VALKIE TALKIE LIKE NASTIA IC: 12702A-462TX021
2021 LIKE NASTIA™ Model:65011
Canada 210
PUSH
TO OPEN
462.5875MHz
FCC ID : PWYJT462TX99041
This device complies with Part 15 of the FCC Rules.
Operation is subject to the following two conditions:
(1) This device may not cause harmful interference,
and (2) This device must accept any interference
received,including interference that
may cause undesired operation.
CAN ICES-003(B)/NMB-003(B)