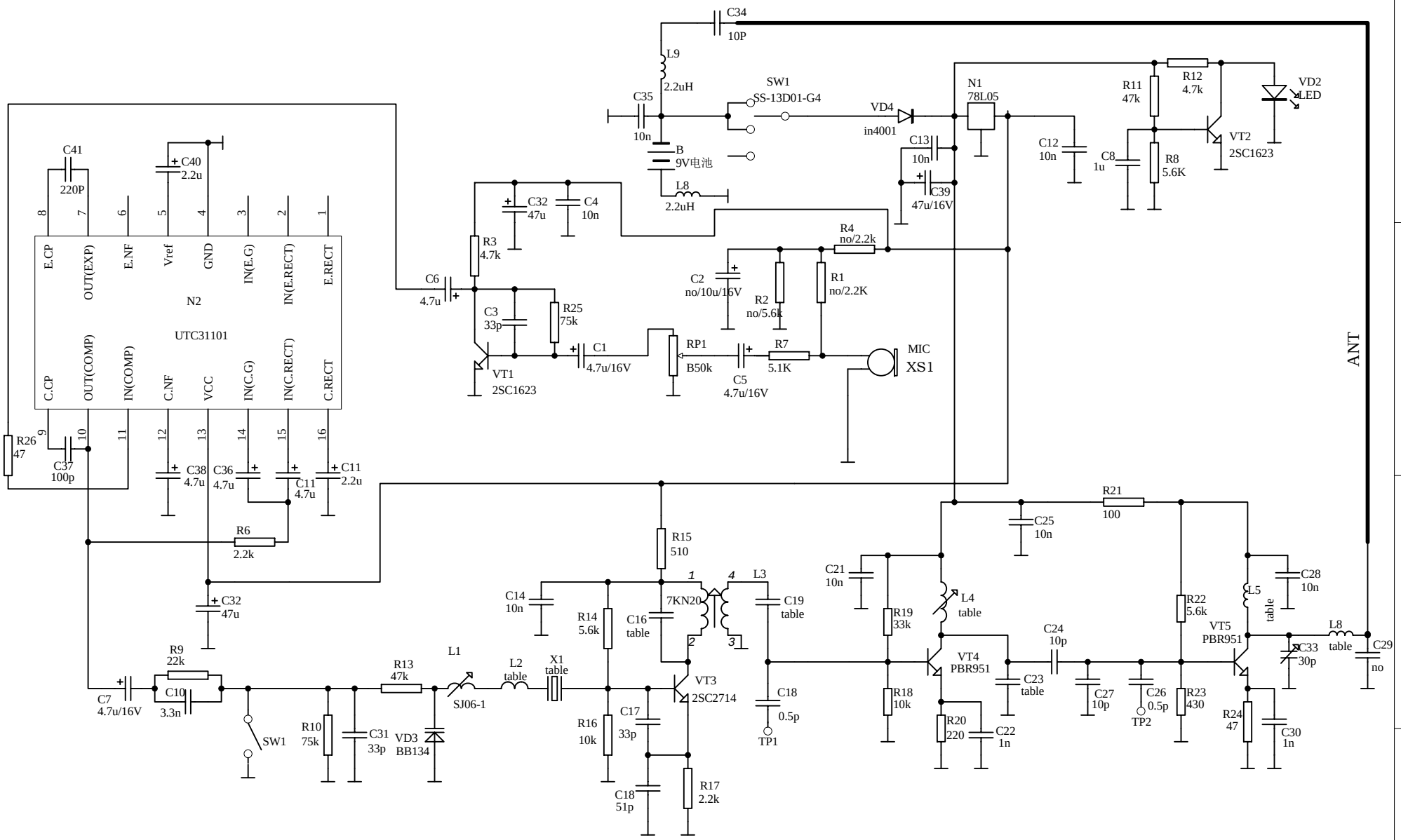

VHF-30HHM Wireless Transmitter SCH