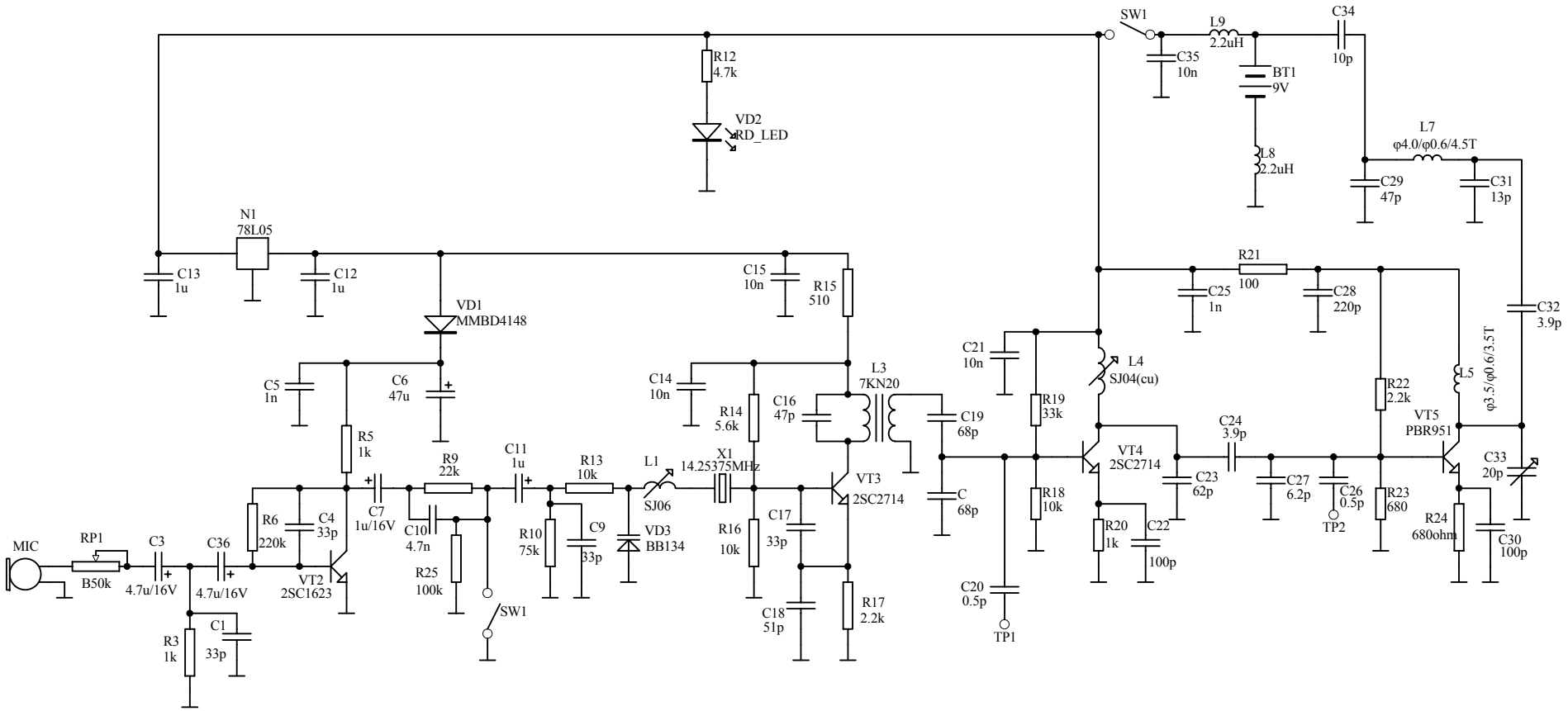

MKA381 Transmitter Schematic

JWL ELECTRONIC CO.,LTD	
TITLE: *MKA381-Tx(JWL31030)*	**REVISION:** *V2.0*
ADDRESS: *ShenZhen China*	
DESIGN: *DengQiang*	**APPROVE:** *YouXiaoJun*
Printer Date: *16-Mar-2005*	**Sheet:** *1 / 1*