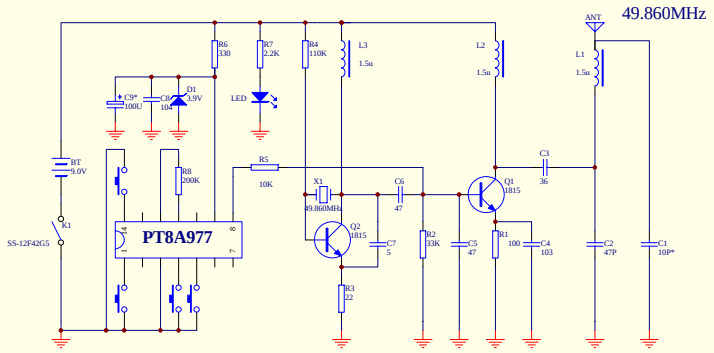

Title			
Size A4	Number 0460T-49		Revision
Date: 25-Aug-2005		Sheet of	
File: H:\0460TFCC1.DDB		Drawn By: ÌÞÜÀÆÏ/	