Radium
sculpture label
3M VHB
3M VHB

NO	ECN No.	DESCRIPTION	ISSUER	DATE
1、				
2、				

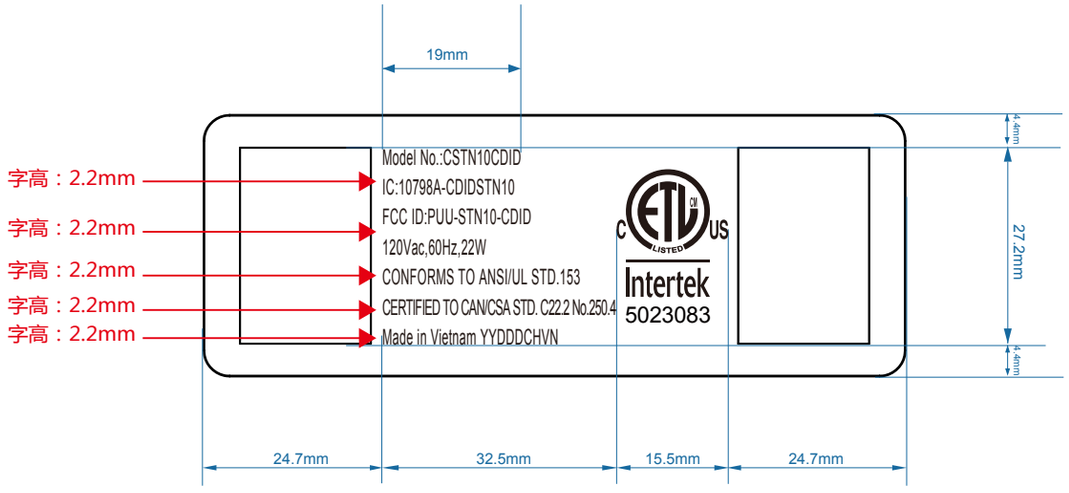

镭雕

技术要求:

1. logo清晰、不允许出现漏印 、烧焦、白点、边沿模糊等不良现象。
2. 公差：+/-1mm

ANGLE	RANGE / GRADE					
	A					
	B					
SIZE			SCALE	1:1	View angle	
WEIGHT	N/A		Material Color&Finish	Neon下盖镭雕(3m)	Unit	m m
					Page	1/1
DESIGNED	曾海兰	2022-08-04	Part Name	镭雕	Drawn No.	JUB8.080.1830
CHECKED						
APPROVED			Project Name		VERSION	V1.0

NO	ECN No.	DESCRIPTION	ISSUER	DATE
1、				
2、				

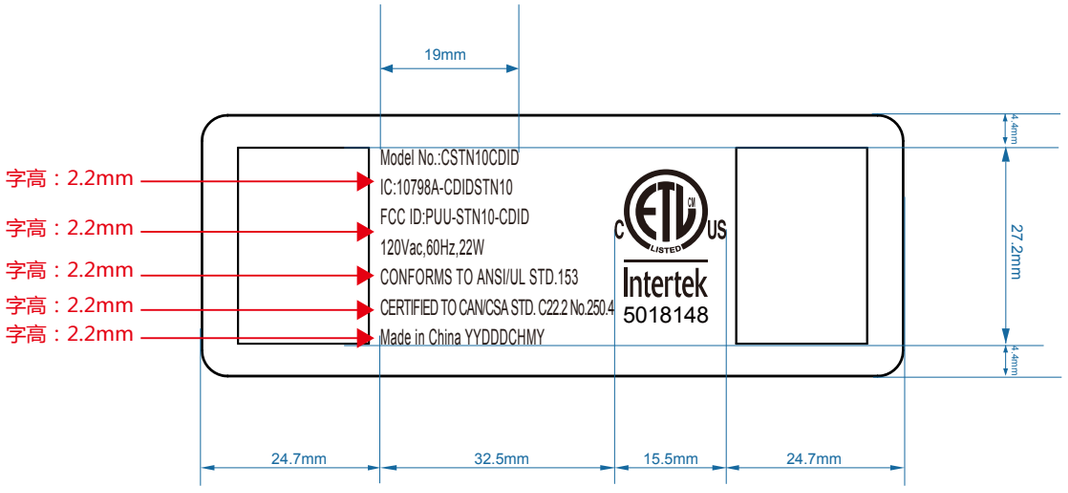

镭雕

技术要求:

1. logo清晰、不允许出现漏印 、烧焦、白点、边沿模糊等不良现象。
2. 公差：+/-1mm

ANGLE	RANGE / GRADE					
	A					
	B					
SIZE			SCALE	1:1	View angle	
WEIGHT	N/A		Material Color&Finish	Neon下盖镭雕(3m)	Unit	m m
					Page	1/1
DESIGNED	曾海兰	2022-06-16	Part Name	镭雕	Drawn No.	JUB8.080.1830
CHECKED						
APPROVED			Project Name		VERSION	V1.0