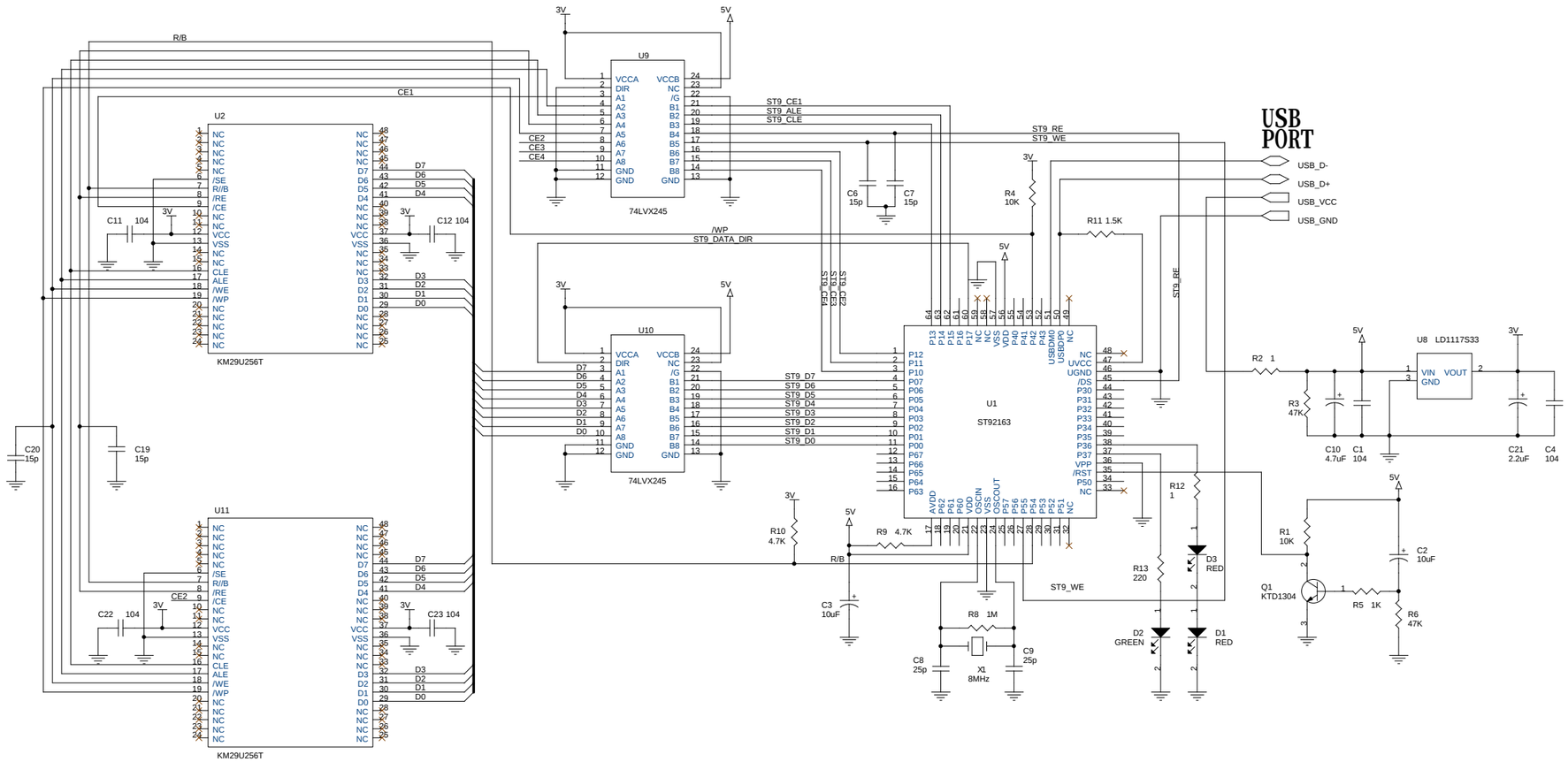

Title	<Title> USD
Size	Document Number <Doc>
Rev	A
Date:	Friday, December 21, 2001
Sheet	1 of 1