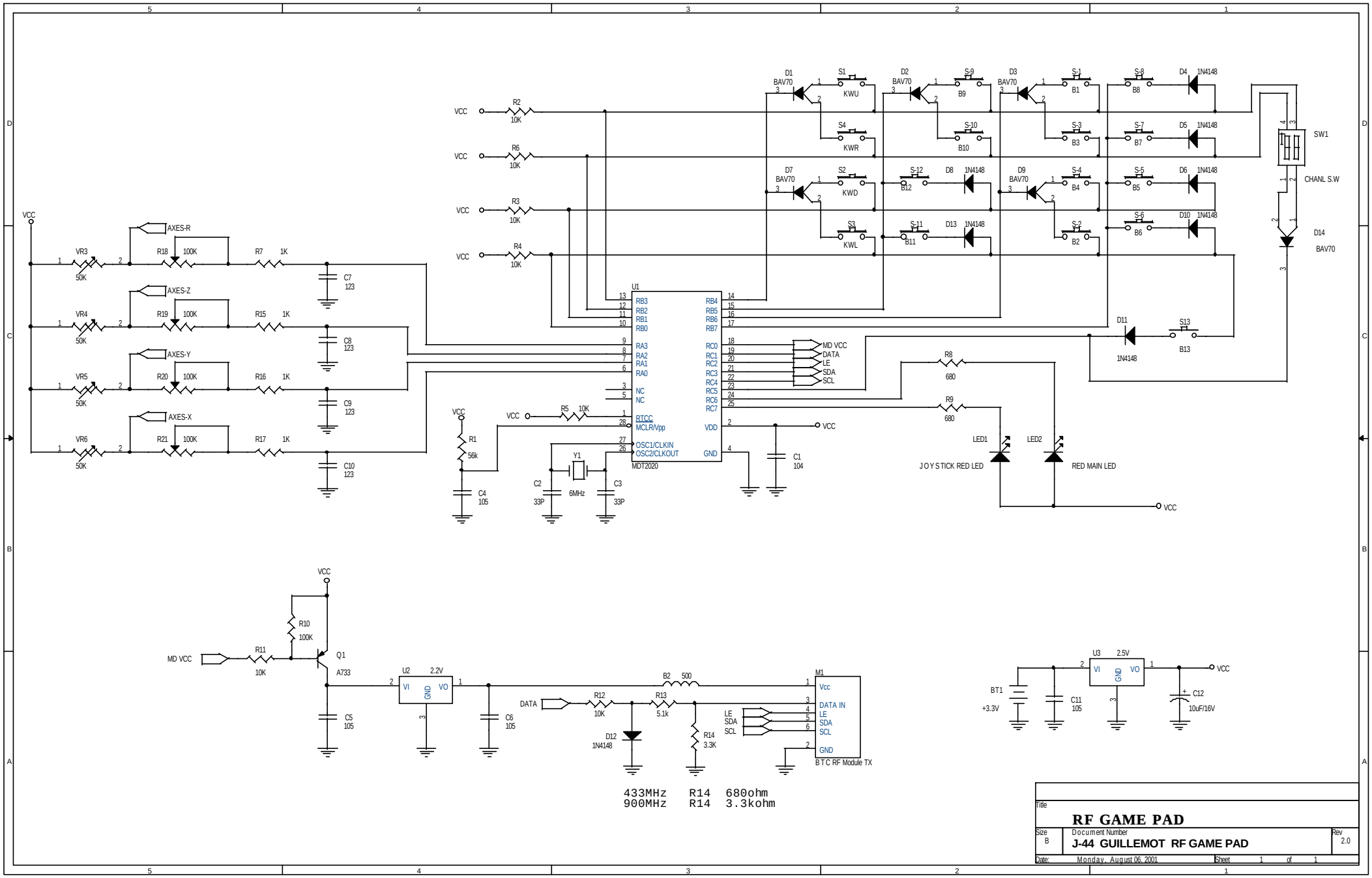
VCC
R2 10K
R6 10K
R3 10K
R4 10K
D1 BAV70
D2 BAV70
D3 BAV70
D7 BAV70
D9 BAV70
S1 KWU
S4 KWR
S2 KWD
S3 KWL
S-9 B9
S-10 B10
S-12 B12
S-11 B11
S-1 B1
S-3 B3
S-4 B4
S-2 B2
S-8 B8
S-7 B7
S-5 B5
S-6 B6
D4 1N4148
D5 1N4148
D6 1N4148
D10 1N4148
D8 1N4148
D13 1N4148
SW1
CHANL S.W
D14 BAV70
D11 1N4148
S13 B13
AXES-R
AXES-Z
AXES-Y
AXES-X
VR3 50K
VR4 50K
VR5 50K
VR6 50K
R18 100K
R19 100K
R20 100K
R21 100K
R7 1K
R15 1K
R16 1K
R17 1K
C7 123
C8 123
C9 123
C10 123
U1
MDT2020
RB3
RB2
RB1
RB0
RA3
RA2
RA1
RA0
NC
NC
RTCC
MCLR/Vpp
OSC1/CLKIN
OSC2/CLKOUT
RB4
RB5
RB6
RB7
RC0
RC1
RC2
RC3
RC4
RC5
RC6
RC7
VDD
GND
MD VCC
DATA
LE
SDA
SCL
R5 10K
R1 56k
C4 105
Y1 6MHz
C2 33P
C3 33P
C1 104
R8 680
R9 680
LED1
LED2
JOYSTICK RED LED
RED MAIN LED
R10 100K
R11 10K
Q1 A733
MD VCC
U2 2.2V
VI
GND
VO
C5 105
C6 105
DATA
R12 10K
R13 5.1k
B2 500
D12 1N4148
R14 3.3K
LE
SDA
SCL
M1
Vcc
DATA IN
LE
SDA
SCL
GND
BTC RF Module TX
U3 2.5V
BT1 +3.3V
C11 105
C12 10uF/16V
433MHz R14 680ohm
900MHz R14 3.3kohm
Title
RF GAME PAD
Size B
Document Number
J-44 GUILLEMOT RF GAME PAD
Rev 2.0
Date: Monday, August 06, 2001
Sheet 1 of 1

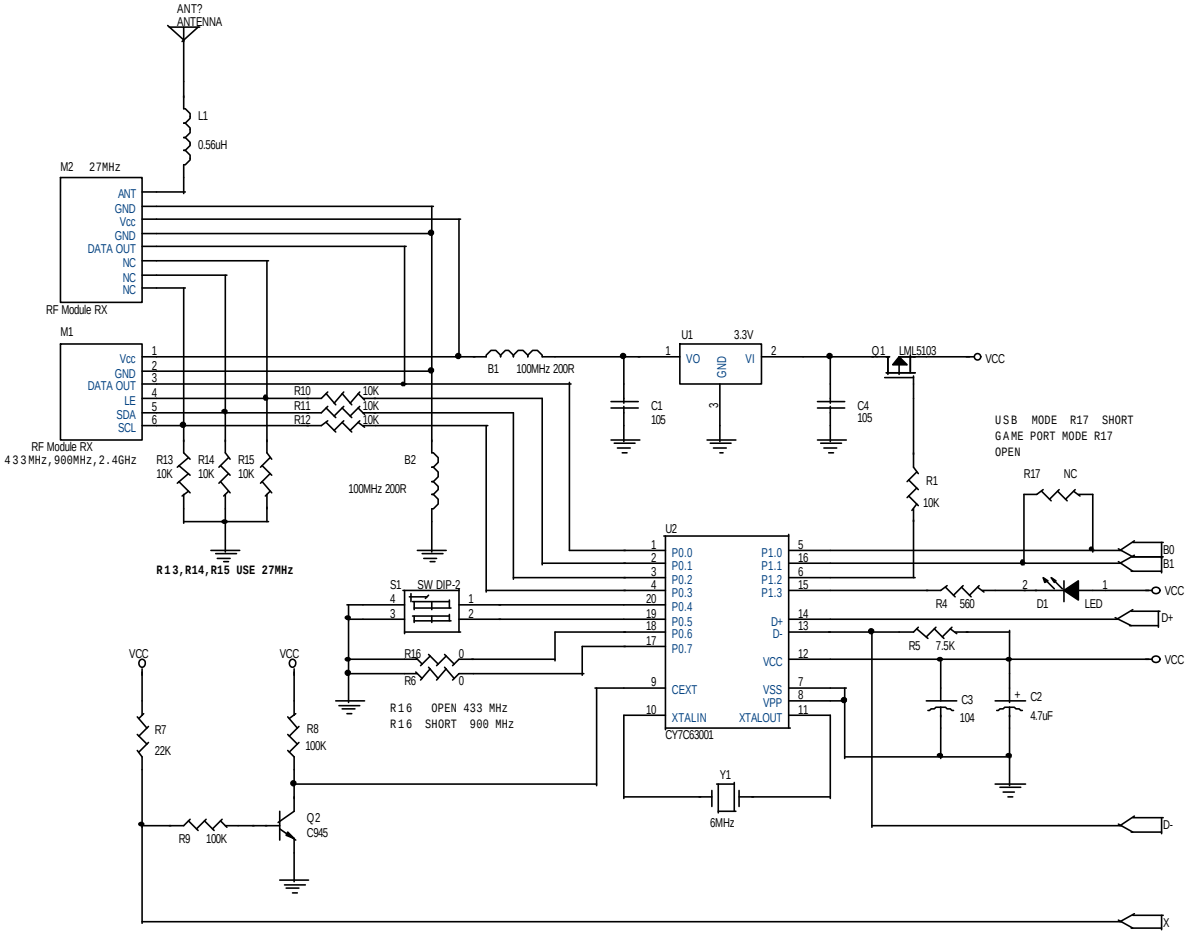

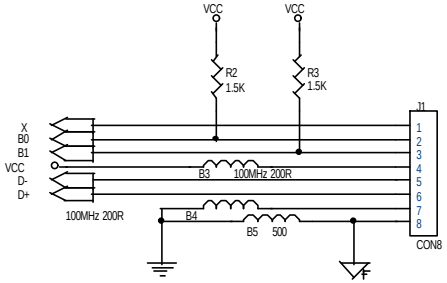

Title	**RF GAME PAD RECEIVER**
Size B	Document Number **J-19 , J-23 , J-44 USE**
Rev 1.0	
Date: 2001/06/28	Sheet 1 of 1