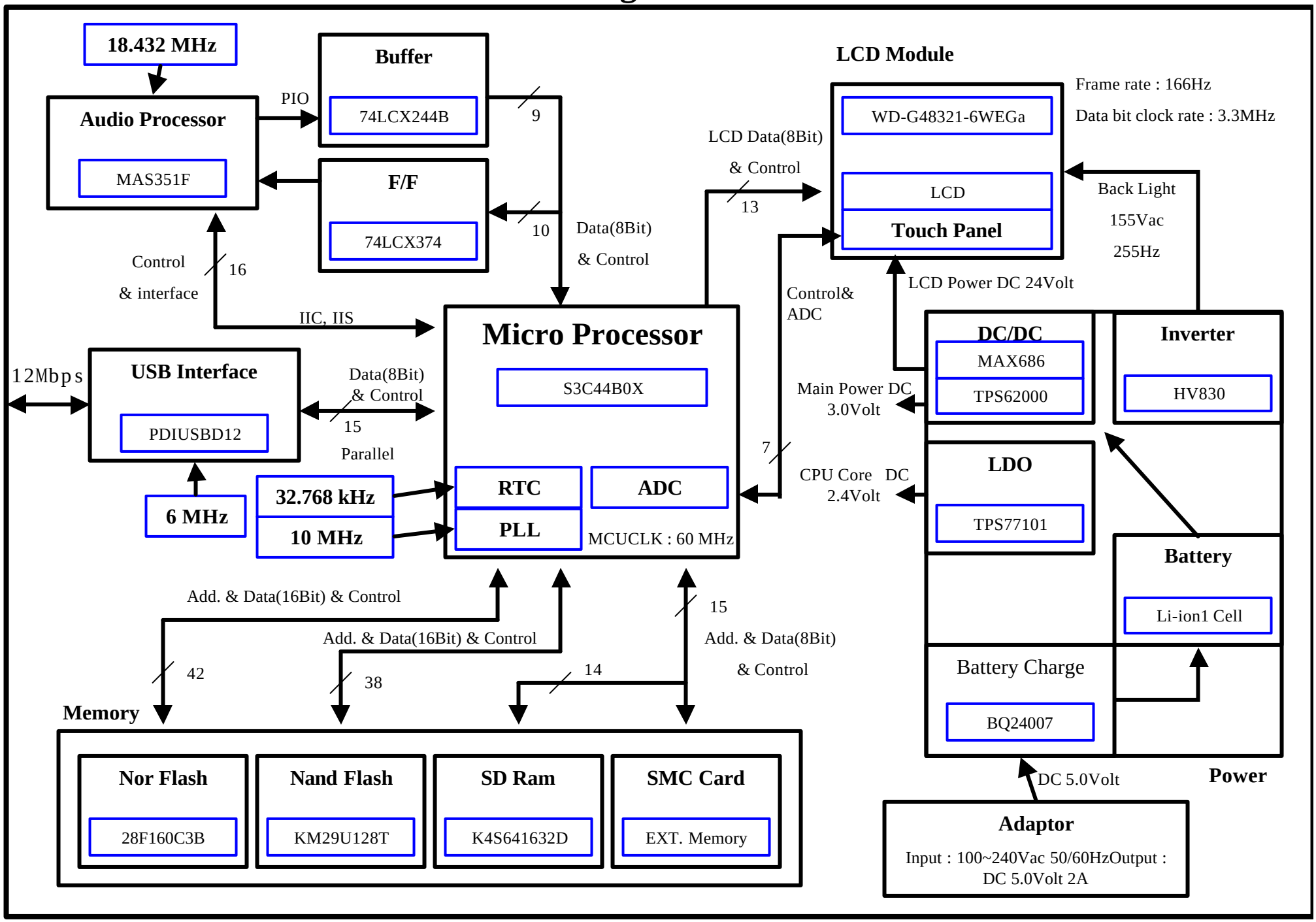Block Diagram of HI210