2.4 GHz Wireless PBX Handset

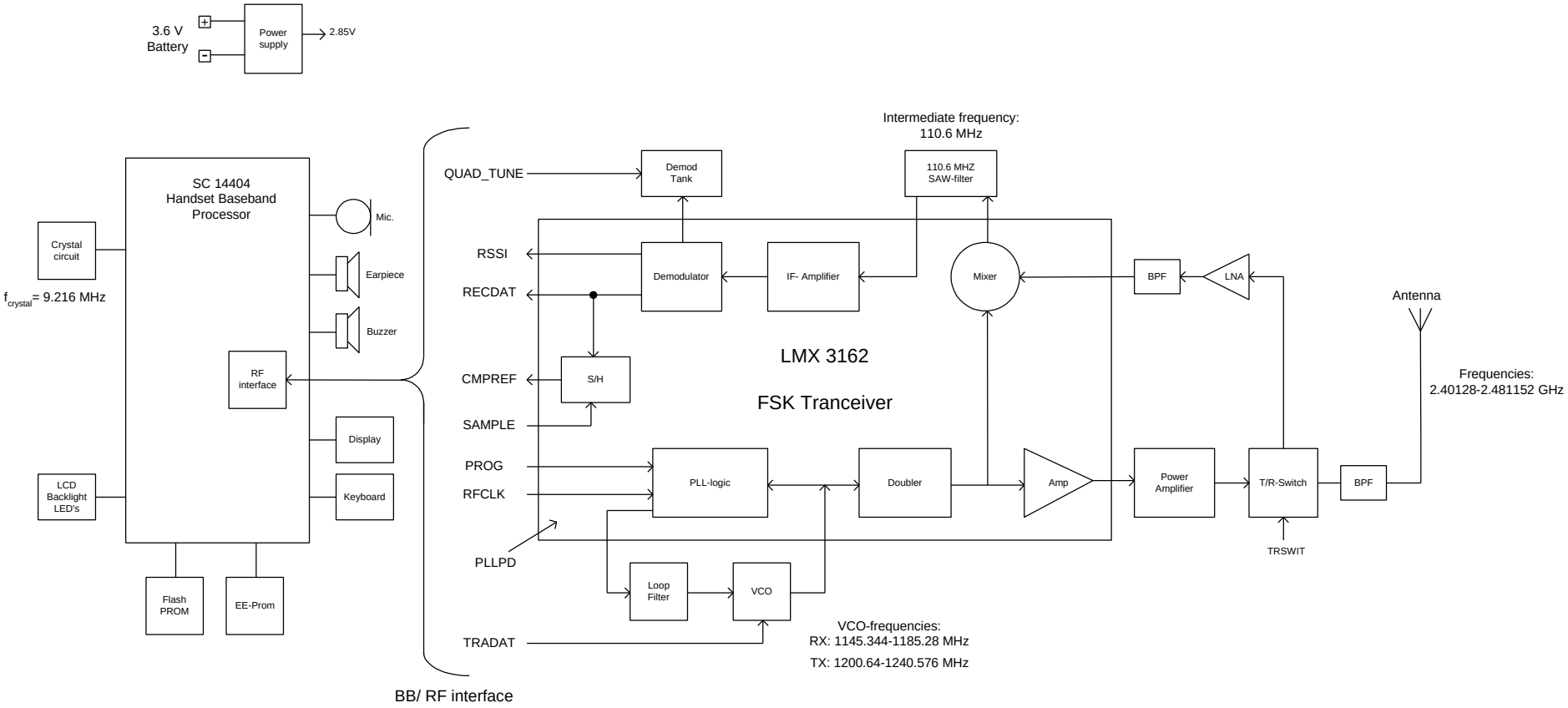

	Technical Documentation Nestor Handset			Block Diagram
Date: 2001-0824	**File**: NestorPPBlock.doc	**Ref.: SEJ**	**Rev.**: 1	**Page: 1** of **1** page(s)

This document and the information contained is property of RTX Telecom A/S, Denmark. Unauthorized copying is not allowed. The information in this document is believed to be correct at the time of writing. RTX Telecom A/S reserves the right at any time to change said content, circuitry and specifications.