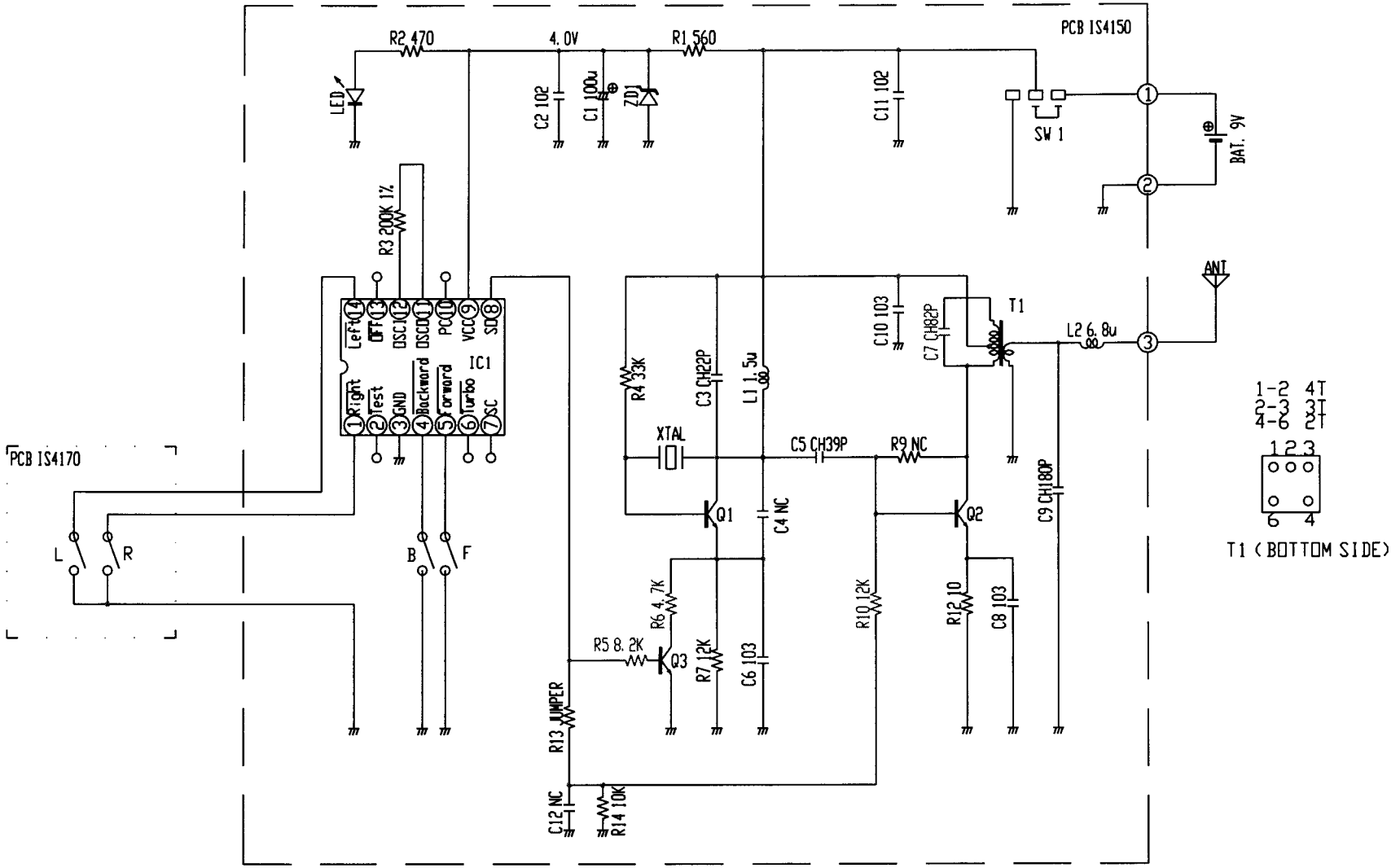

IC1 PT8A977
Q1 2SC4116(Y)
Q2 2SC4116(Y)
Q3 2SC4116(Y)

XTAL 27.145MHz KDSC
T1 Type 5TY5
L1 CEC-1R5J
L2 CEC-6R8J

ZD1 3.9V
R3 +-1%
SW1 SS-12D07-VG6 (COMAX)
LED D=5, RED
RESISTORS 1.6mm X 0.8mm SIZE
CAPACITORS 1.6mm X 0.8mm SIZE

DIMENSIONAL mm	SCALE	CREATE DATE 28-MAY-2004	VER. 1.0 26-JUL-2004	DWG. No. IS4050B
THICKNESS	Q'TY	MATERIAL / FINISH		
SLIDE SLOPE	DESIGNED TSUCHIDA	MODEL CODE / NAME IS / 1-43 4WD SUPER SLICKS		
SHRINK	APPROVED	PARTS CODE / NAME Tx SCHEMATIC 27MHz FCC		