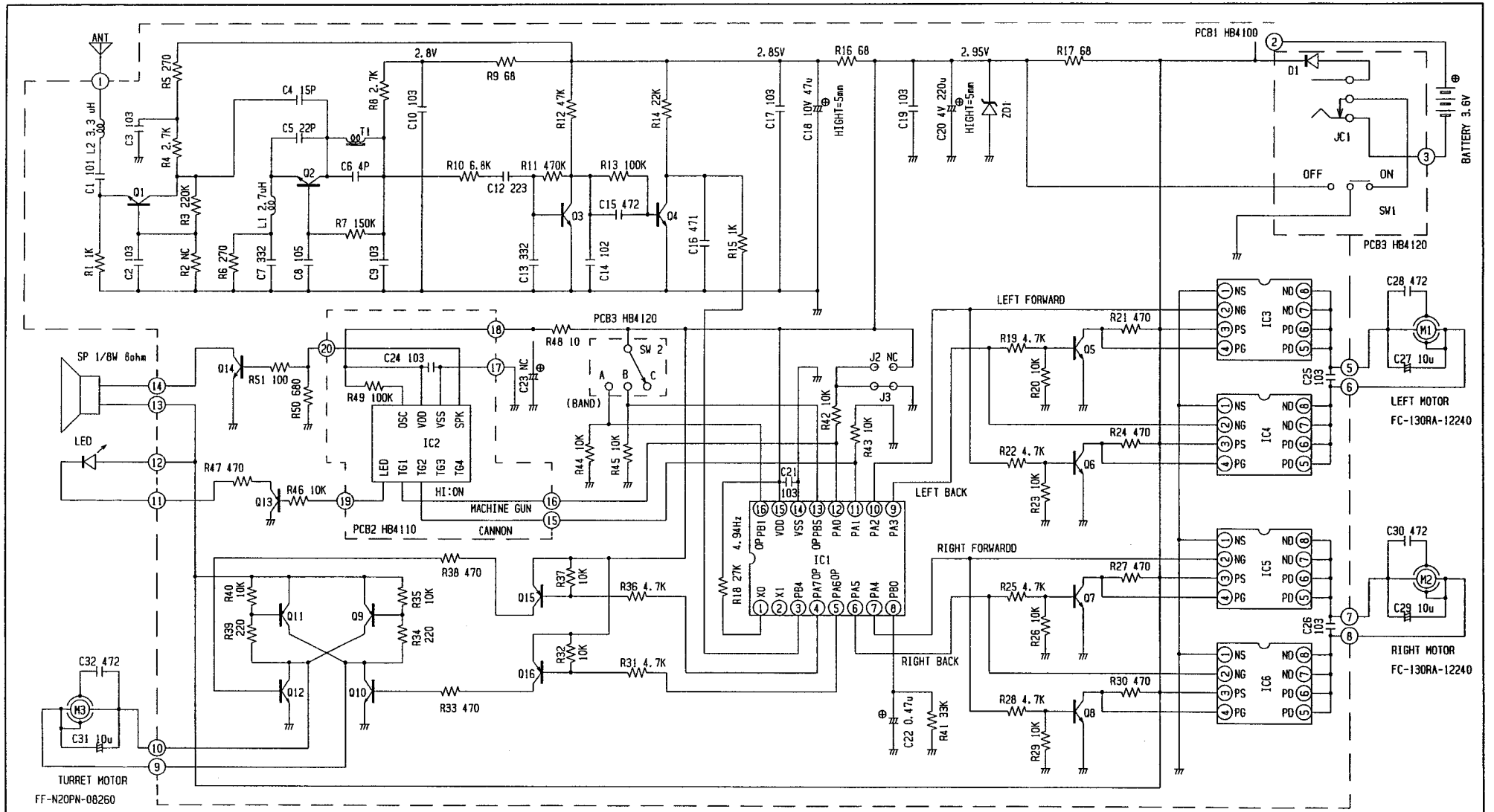

Q1 2SC4116(Y)	Q9 2SA1204(Y)	IC1 HAR5 (SPMCO1A,SOP)	IC3 uPA1793G
Q2 2SC4116(Y)	Q10 2SC2884(Y)	IC2 SPES03	IC4 uPA1793G
Q3 2SC4116(Y)	Q11 2SA1204(Y)	D1 1N4001	IC5 uPA1793G
Q4 2SC4116(Y)	Q12 2SC2884(Y)	ZD1 02DZ2.4X orEQUIVALENT	IC6 uPA1793G
Q5 2SC4116(Y)	Q13 2SA1586(Y)		T1 5TYS-867154
Q6 2SC4116(Y)	Q14 2SC2884(Y)		L1 CEC-2R7K
Q7 2SC4116(Y)	Q15 2SA1586(Y)		L2 CEC-3R3K
Q8 2SC4116(Y)	Q16 2SA1586(Y)		

LED W03363RSC-0 (#3 RED)
SW1 SK-12D10-G4(COMAX)
SW2 SK-13D10-G4(COMAX)
JC1 DC-037(1.0) (COMAX)
R 1608, +-5%
M1 FC-130RA-14150
M2 FC-130RA-14150
M3 FF-N20PN-08260

R2 NC

DIMENSIONAL ⊕ mm	SCALE	CREATE DATE 20-SEP-2002	VER. 1.0 APR-15-2003	DWG. No. HB4001
THICKNESS	Q'TY	MATERIAL / FINISH		
SLIDE SLOPE	DESIGNED HAYASHI	MODEL CODE / NAME HB / MINI TANK		
SHRINK	APPROVED	PARTS CODE / NAME Rx SCHEMATIC 49MHz FCC		