cpu
cpu.sch

| | |
|---|---|
| D[0..15] | /WR |
| BAT | /RD |
| ADP | /CSFLASH |
| /ERROR | /SLCTIN |
| SLCT | /INIT |
| PE | /MTXD |
| /ACK | /MRTS |
| BUSY | /MRST |
| /MRXD | A[0..23] |
| /MCTS | /CSROM |
| /EXTDET | /CSSDRAM |
| /EXTMEM1 | /SDRAS |
| APDET | /SDCAS |
| PD[0..7] | /SDWE |
| /RFOK | SDLDQM |
| | SDUDQM |
| | SDCKE |
| | SDCLK |
| | /AUTOFDX |
| | /STROBE |
| | /CSEXTMEM |
| | LCDPOW |
| | /MPOW |
| | CONTRA |
| | BUZZER |
| | /R-KEY |
| | /RFPOW |

memory
memory.sch

| | |
|---|---|
| /CSROM | /EXTMEM1 |
| /RD | /ERROR |
| /WR | BUSY |
| /CSFLASH | /ACK |
| D[0..15] | PE |
| SDLDQM | SLCT |
| /SDWE | |
| /SDCAS | |
| /SDRAS | |
| /CSSDRAM | |
| SDCKE | |
| SDUDQM | |
| /CSEXTMEM | |
| A[0..23] | |
| SDCLK | |
| PD[0..7] | |
| /INIT | |
| /AUTOFDX | |
| /STROBE | |
| /SLCTIN | |

scm
scm.sch

| | |
|---|---|
| /MTXD | /MRXD |
| /MRTS | /MCTS |
| /MRST | POW |
| BUZZER | PCLK |
| DATAN | |
| DATAP | |

DAA
DAA.sch

| | |
|---|---|
| DATAN | /EXTDET |
| DATAP | APDET |
| POW | RF-LINE-DET |
| PCLK | RF-MPWR-DET |
| RF-AUDIO-OUT | RF-AUDIO-IN |
| RF-ON | RF-HK-DET |
| AMUTE | |

power
power.sch

| | |
|---|---|
| LCDPOW | ADP |
| CONTRA | BAT |
| /MPOW | |
| /RFPOW | |

Mobile
Mobile.Sch

| | |
|---|---|
| /R-KEY | /RFOK |
| RF-HK-DET | RF-ON |
| RF-LINE-DET | RF-AUDIO-OUT |
| RF-AUDIO-IN | AMUTE |
| RF-MPWR-DET | |

| | | | | |
|---|---|---|---|---|
| Inventec | INVENTEC ELECTRONICS (NANJING) CO., LTD. | | | MODEL NO. |
| APPROVAL | CHECK | DESIGN | DRAW | Date: 26-Jul-2001 |
| Title: main | | | | Rev. 2A |
| File: E:\Project\Mivo350\Mivo350_2A.ddb - Documents\main.sch | | | | Sheet 0 of 7 |

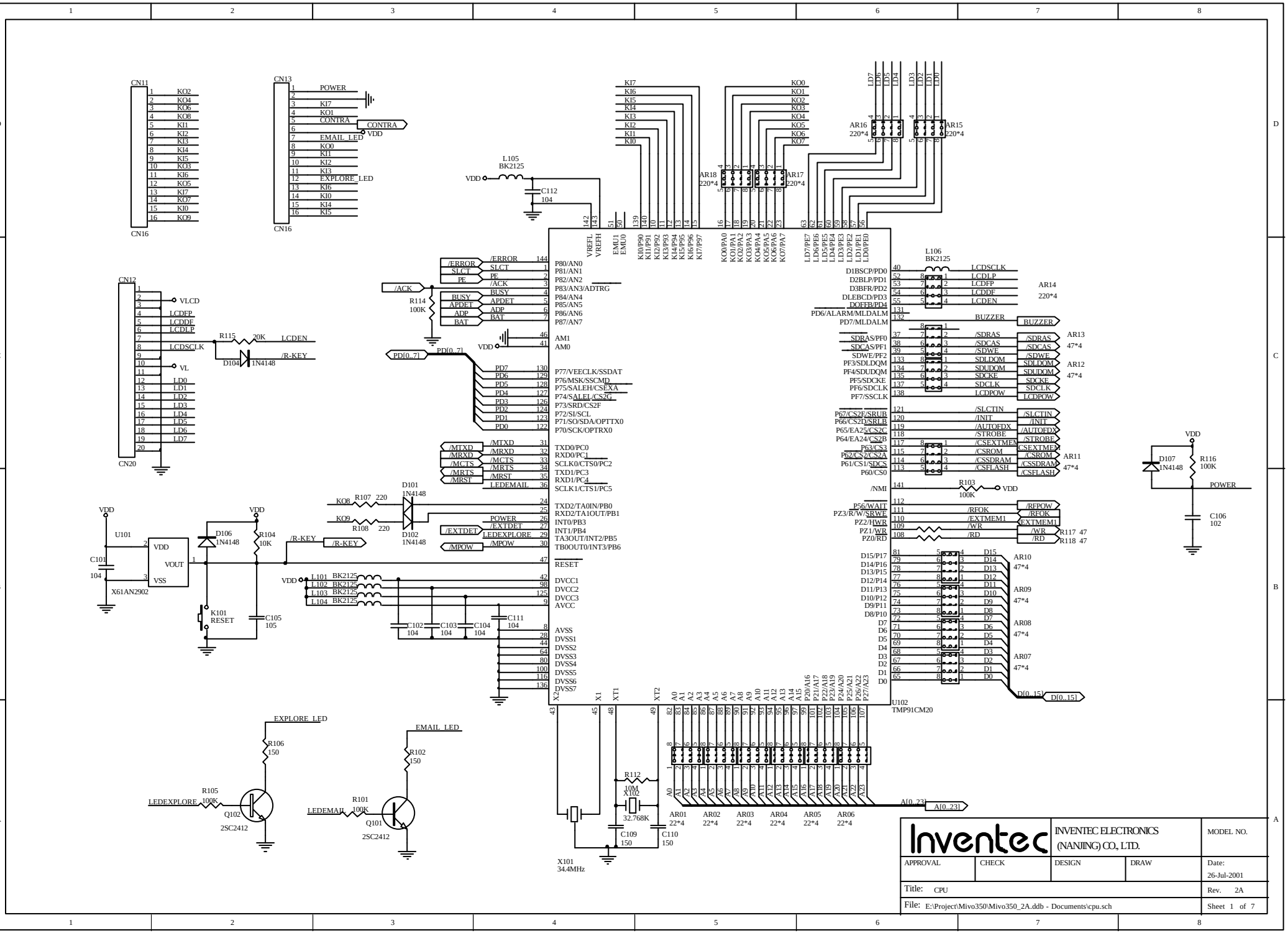
CN11
CN16
CN13
CN16
CN12
CN20
U102
TMP91CM20
X61AN2902
U101
K101
RESET
X101
34.4MHz
X102
32.768K
Q102
2SC2412
Q101
2SC2412
EXPLORE_LED
EMAIL_LED
LEDEXPLORE
LEDEMAIL
CONTRA
POWER
VDD
VLCD
VL
/R-KEY
D[0..15]
A[0..23]
Inventec
INVENTEC ELECTRONICS
(NANJING) CO., LTD.
MODEL NO.
APPROVAL
CHECK
DESIGN
DRAW
Date:
26-Jul-2001
Title: CPU
Rev. 2A
File: E:\Project\Mivo350\Mivo350_2A.ddb - Documents\cpu.sch
Sheet 1 of 7

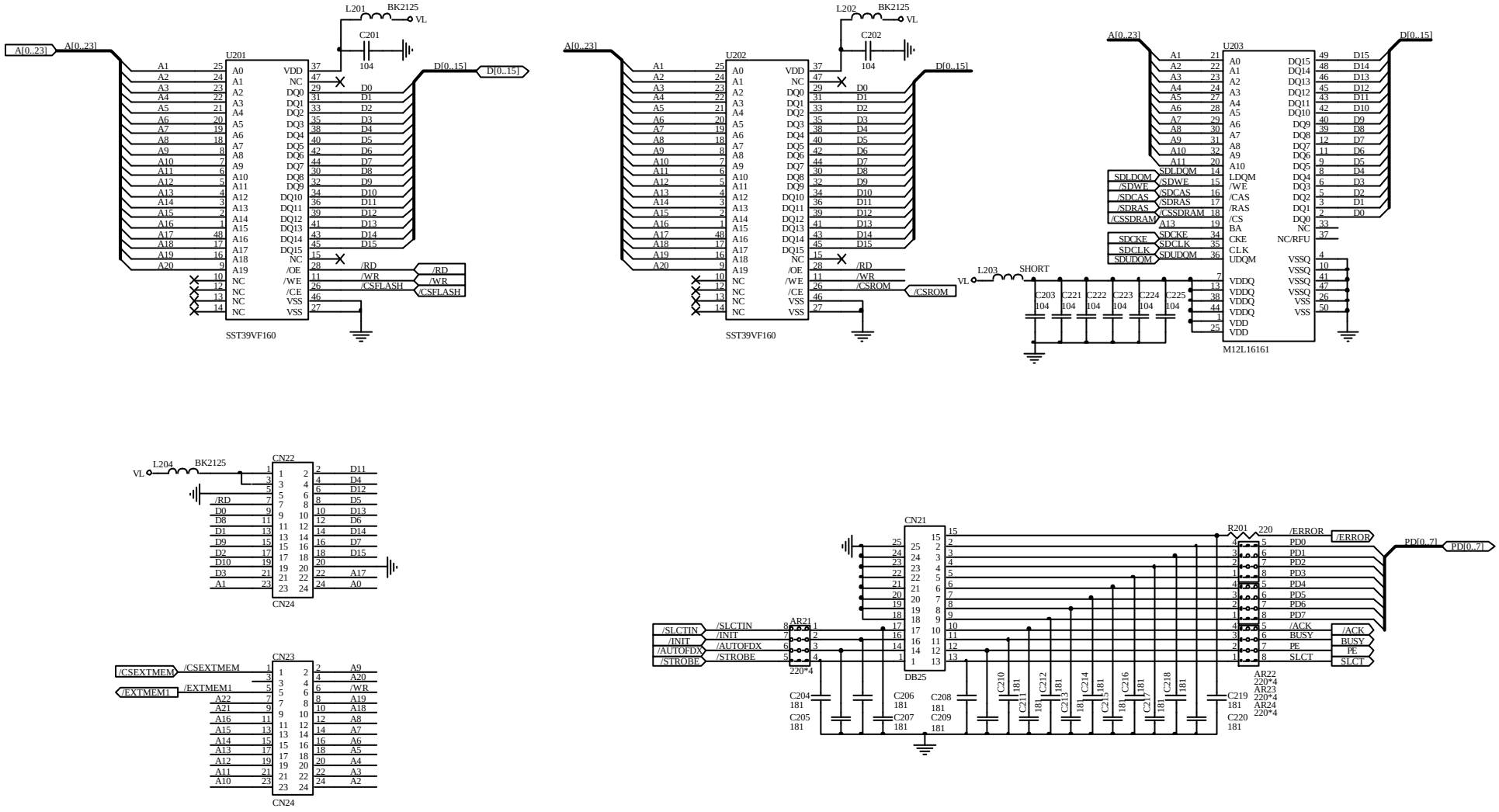


| | | | | |
|---|---|---|---|---|
| Inventec | INVENTEC ELECTRONICS (NANJING) CO., LTD. | | | MODEL NO. |
| APPROVAL | CHECK | DESIGN | DRAW | Date: 26-Jul-2001 |
| Title: Memory | | | | Rev. 2A |
| File: E:\Project\Mivo350\Mivo350_2A.ddb - Documents\memory.sch | | | | Sheet 2 of 7 |

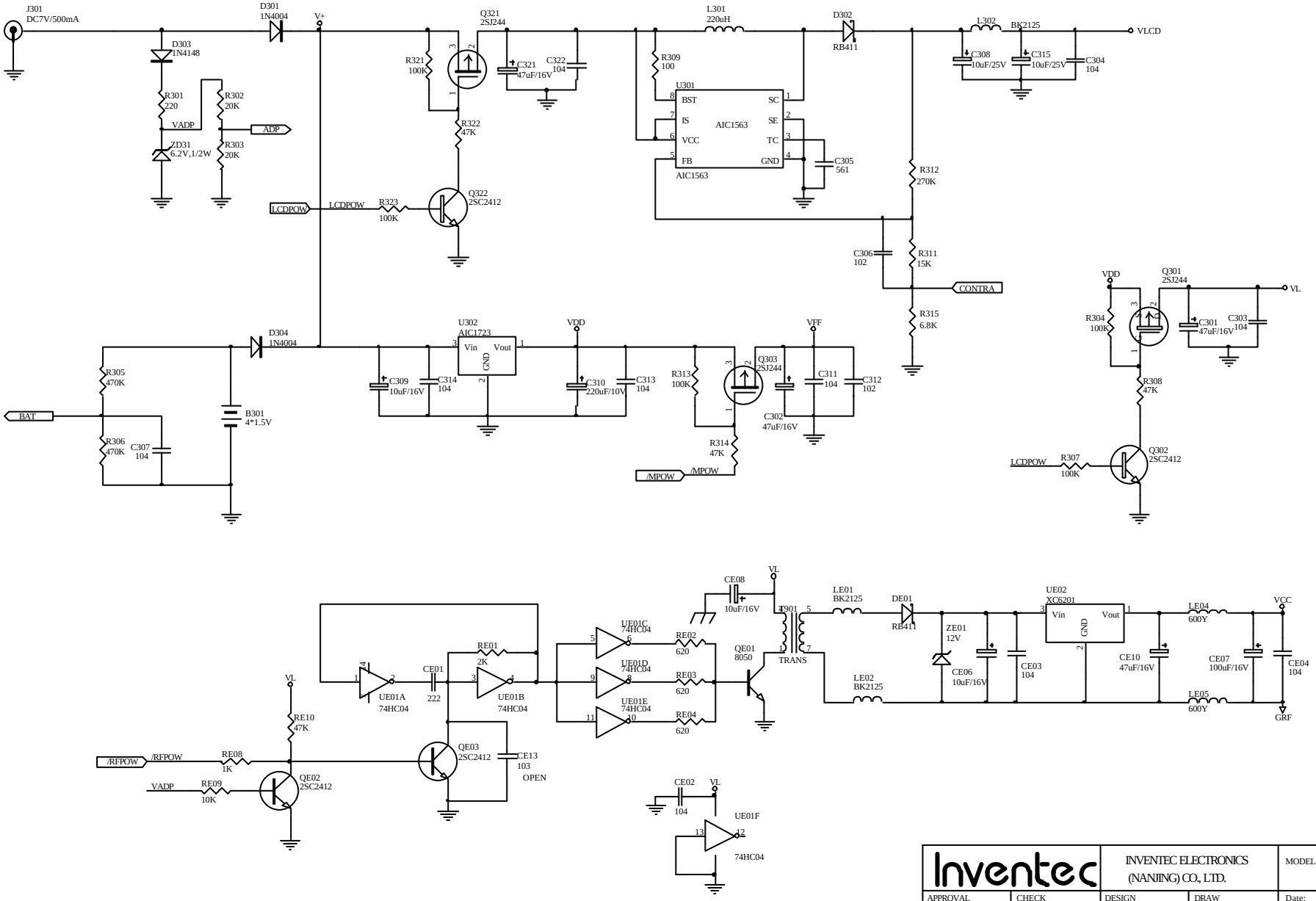


| | | | |
|---|---|---|---|
| Inventec | INVENTEC ELECTRONICS (NANJING) CO., LTD. | | MODEL NO. |
| APPROVAL | CHECK | DESIGN | DRAW | Date: 7-Aug-2001 |
| Title: Power | | | Rev. 2A |
| File: E:\Project\Mivo350\Mivo350_2A.ddb - Documents\power.sch | | | Sheet 3 of 7 |

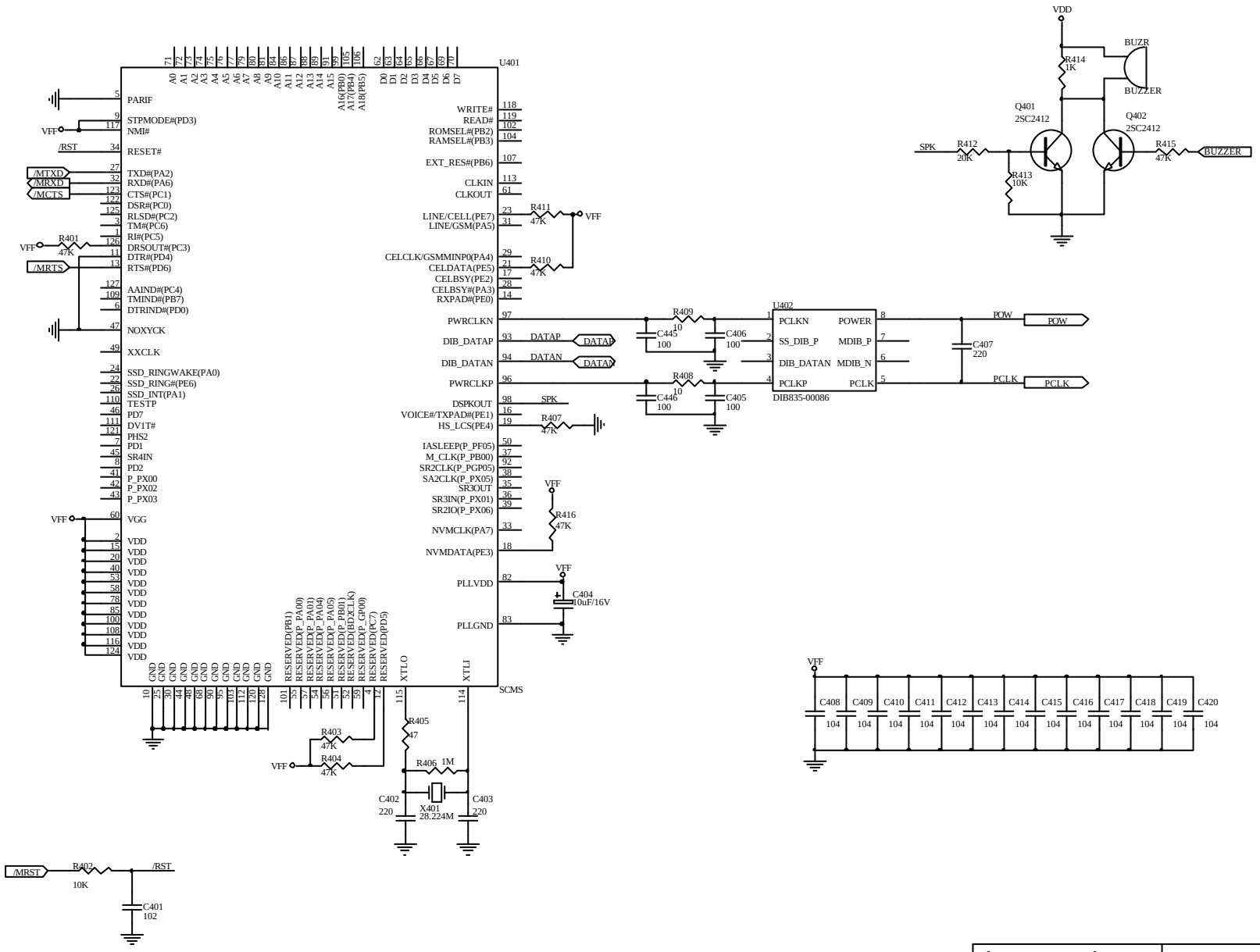


| | | | | |
|---|---|---|---|---|
| Inventec | INVENTEC ELECTRONICS (NANJING) CO., LTD. | | | MODEL NO. |
| APPROVAL | CHECK | DESIGN | DRAW | Date: 26-Jul-2001 |
| Title: SCM | | | | Rev. 2A |
| File: E:\Project\Mivo350\Mivo350_2A.ddb - Documents\scm.sch | | | | Sheet 4 of 7 |

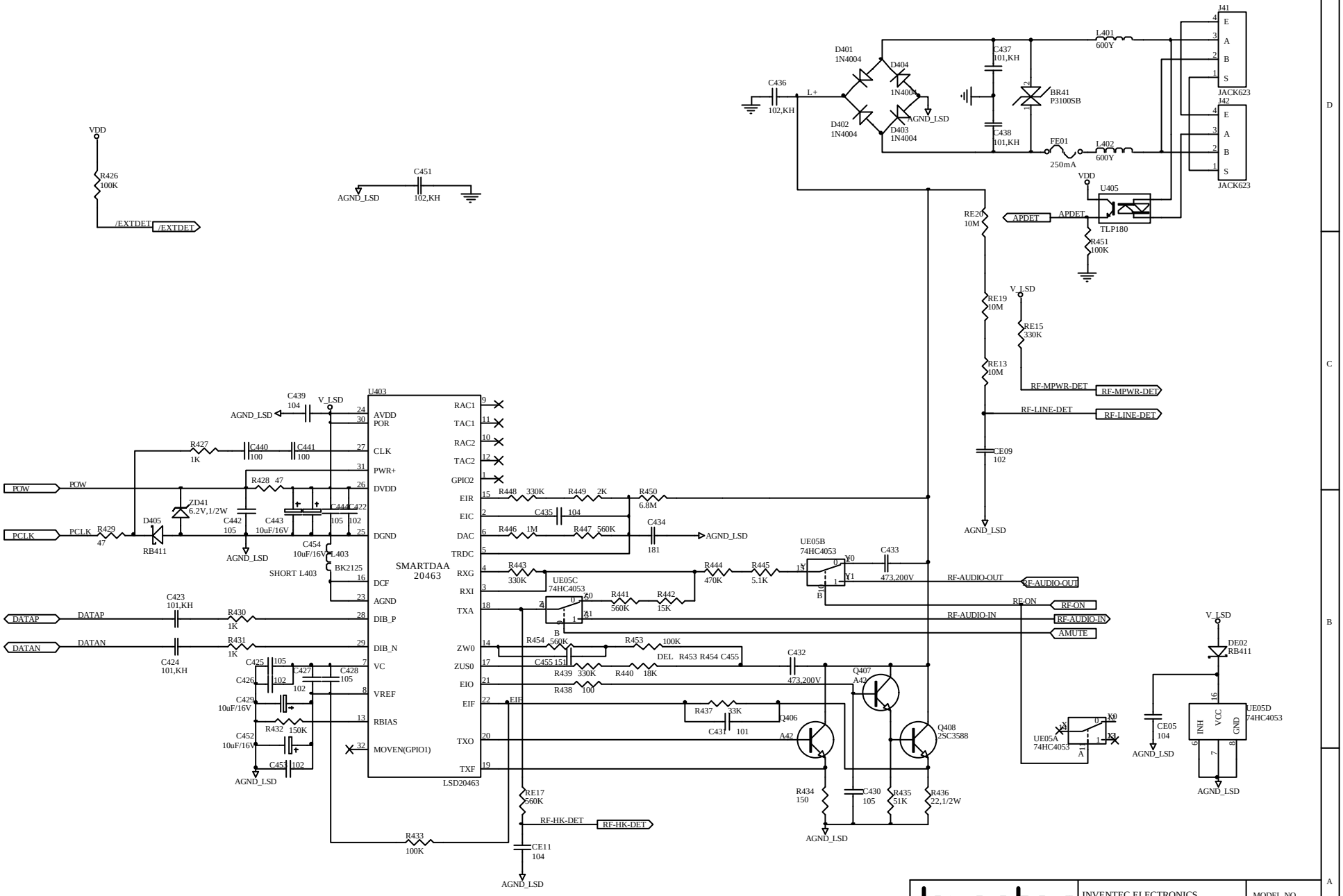


| | | | | |
|---|---|---|---|---|
| Inventec | | INVENTEC ELECTRONICS (NANJING) CO., LTD. | | MODEL NO. |
| APPROVAL | CHECK | DESIGN | DRAW | Date: 28-Aug-2001 |
| Title: DAA | | | | Rev. 2A |
| File: E:\Mivo350\Mivo350_2A.ddb - Documents\DAA.sch | | | | Sheet 5 of 7 |

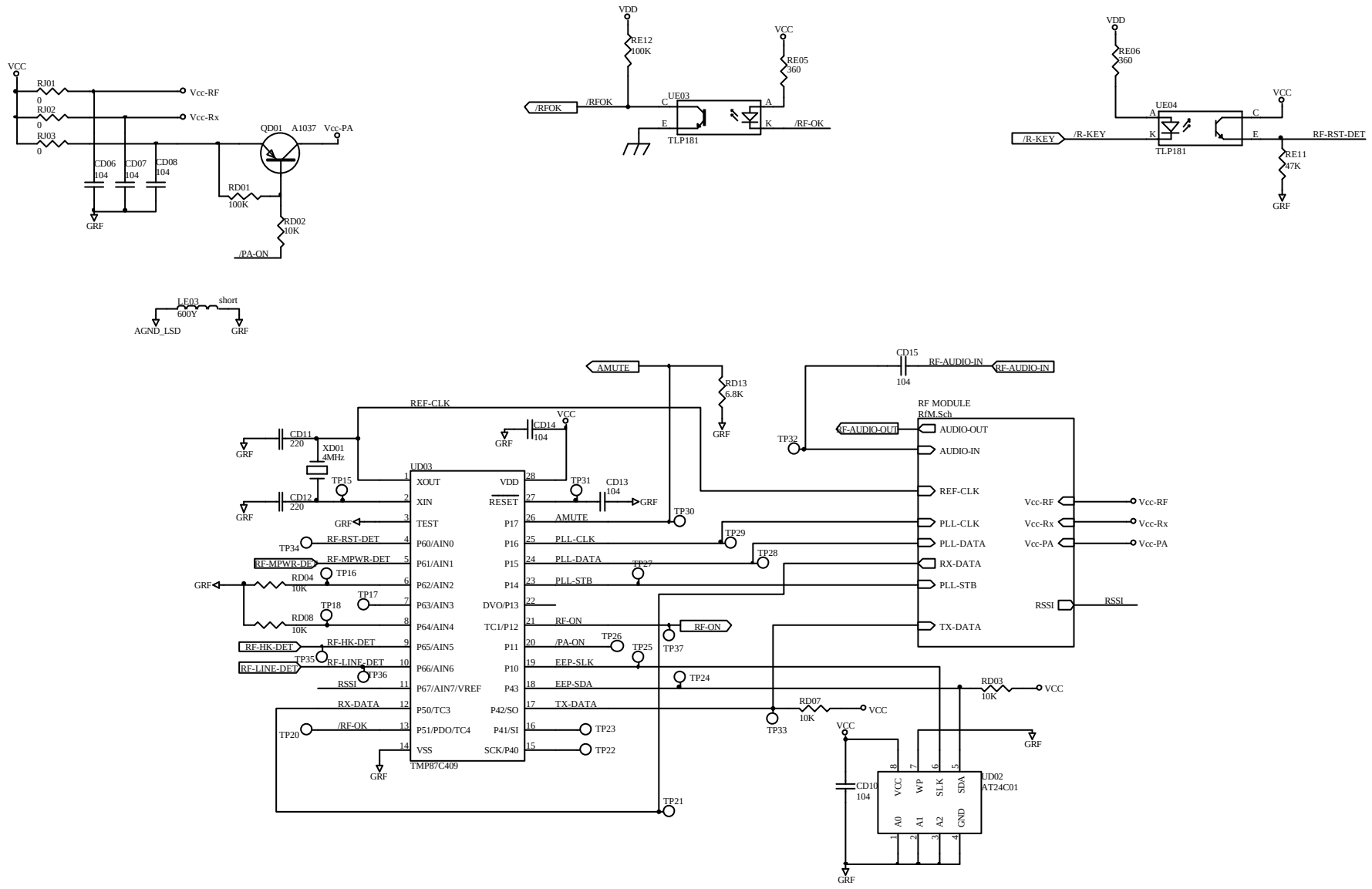


| | | | | | |
|---|---|---|---|---|---|
| **INVENTEC** | Title *Mobile CPU (Mobile)* | | | | ITEM NAME **MIVO 250** |
| CHECK | DESIGN *INC ED3* | Date: | Ver. **0F** | FILE NO. | ITEM NO. **ITEM NO.** |
| APPROVAL | DRAW *INC ED3* | Size: A4 | Sheet 6 of 7 | Print Date: 28-Aug-2001 15:11:32 | |
| | | File Name: E:\Mivo350\Mivo350_2A.ddb - Documents\Mobile.Sch | | | |

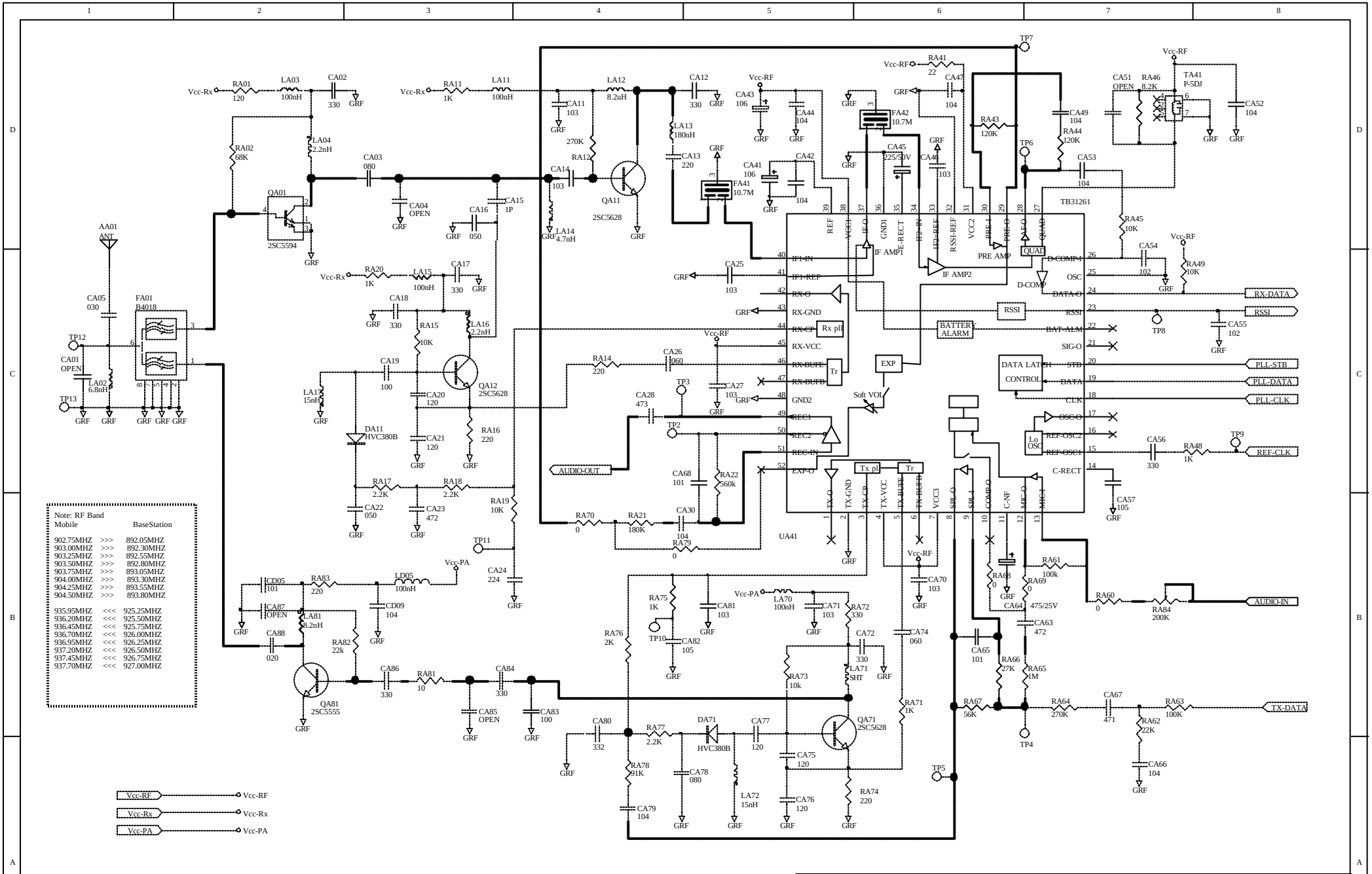


| | | | | | |
|---|---|---|---|---|---|
| INVENTEC | Title: 900MHz RF MODULE (Mobile) | | | | ITEM NAME: MIVO 250 |
| CHECK | DESIGN: INC ED3 | Date: | Ver.: 0F | FILE NO. | ITEM NO.: ITEM NO. |
| APPROVAL | DRAW: INC ED3 | Size: A4 | Sheet 7 of 7 | Print Date: 26-Jul-2001 14:48:40 | |
| | | File Name: E:\Project\Mivo350\Mivo350_2A.ddb - Documents\RfM Sch | | | |