No.	NAME	MAKER	Pcs.	CODE	REMARK
1	FXA3000-G	CONTEC	1	LYSM461	
2	FXA3000-EU MDL-LBL	CONTEC	1	LYSM281	

1

注．梱包材と添付品は、梱包工程に回すこと。

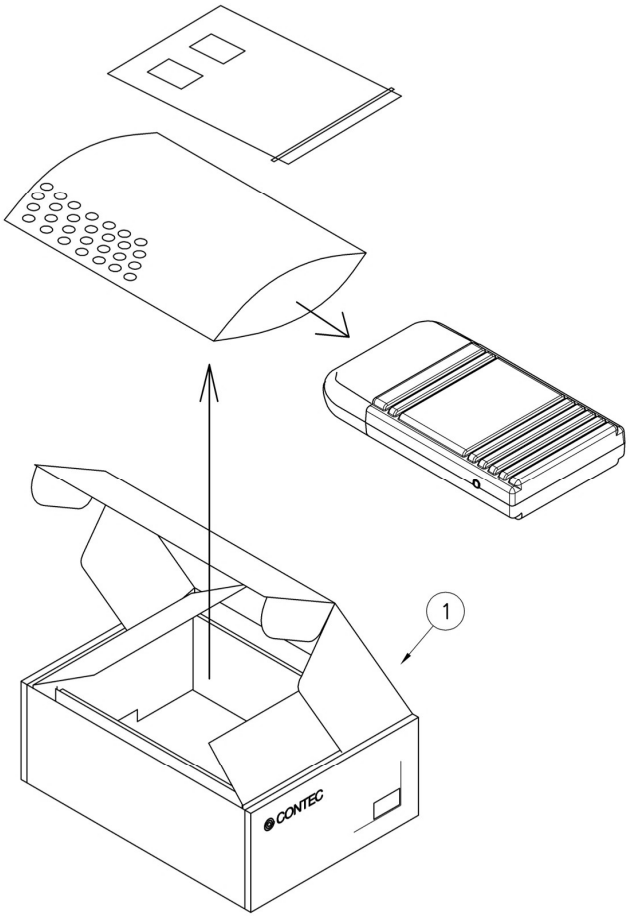

2

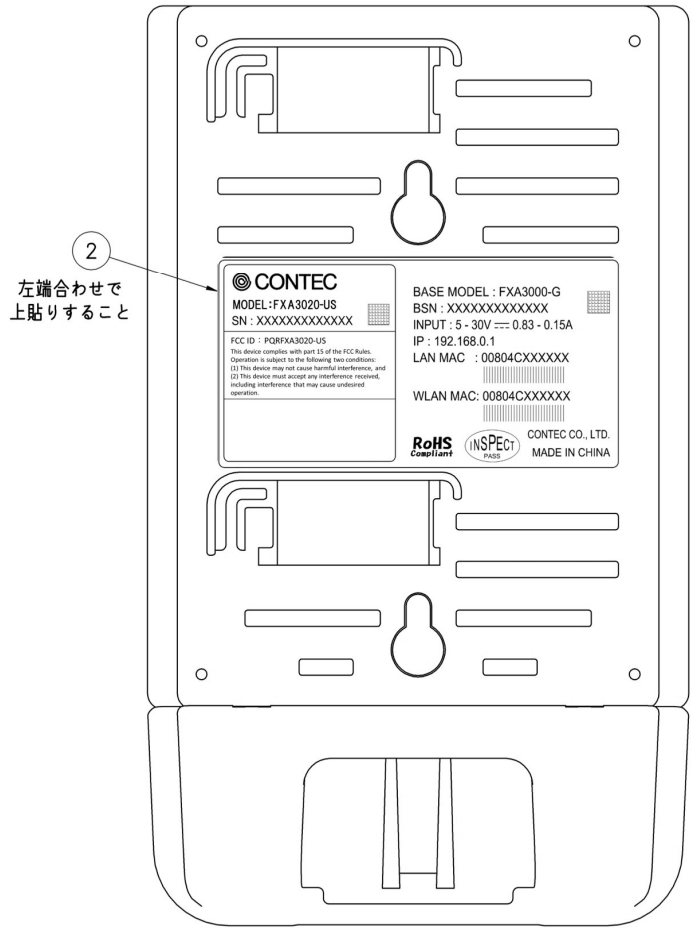

RoHS
Be compliant to the RoHS directive.

Tolerance of Dimension is as following list unless otherwise specified.

UNIT : mm

GENERAL TOLERANCE (±mm) DIMENSION \ CLASS	X	~~PC~~	C
~ 30	0.1	0.2	0.5
30 ~ 120	0.15	0.3	0.8
120 ~ 400	0.2	0.5	1.2
400 ~ 1000	0.3	0.8	2
1000 ~	0.5	1.2	3

0	2015.09.15	New document	KAKITANI

SURFACE TREATMENT		MATERIAL	
COATING COLOR	–	TYPE	–
PLATING	–	MAKER	–
APPEARANCE GRADE	–	MATERIAL COLOR	–
NOTE	–		

SHEET	SCALE	DRAWING DATE	CUSTOMER NAME	JOB No.
A3	1:4	2015.09.15	CONTEC	CC0334
APPROVED: HIDA	CHECKED: HIDA	DESIGNED: KAKITANI	DRAWN: KAKITANI	CODE
			NAME: FXA3020-US BODY	LYSL981
CONTEC			TYPE	Rev. 0