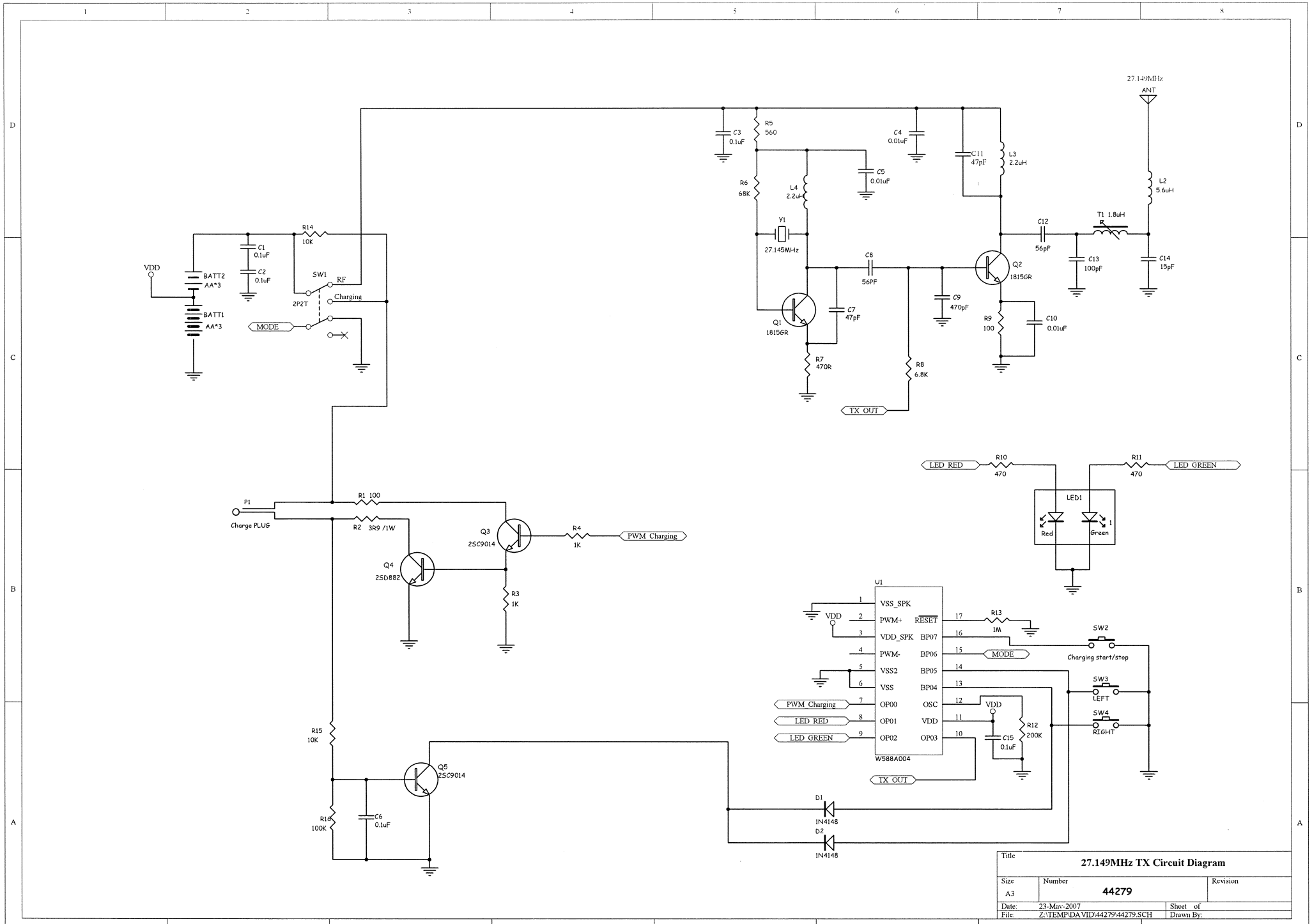

Title	27.149MHz TX Circuit Diagram	
Size A3	Number 44279	Revision
Date: 23-May-2007		Sheet of
File: Z:\TEMP\DAVID\44279\44279.SCH		Drawn By: