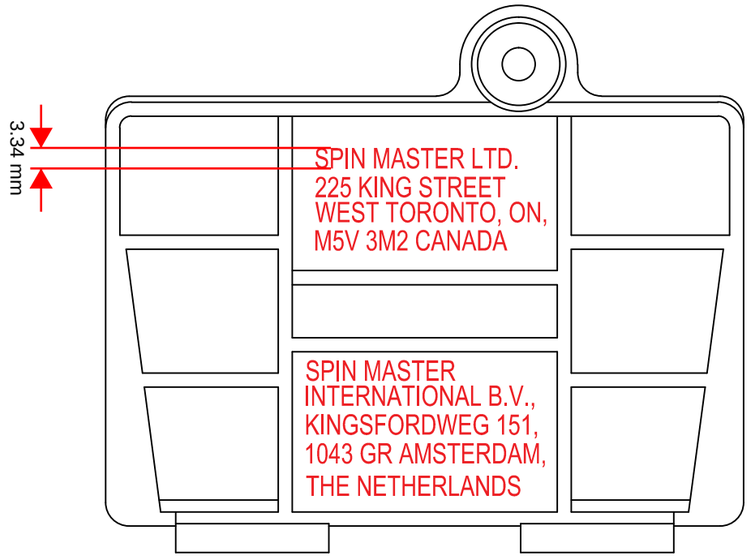
3.34 mm
SPIN MASTER LTD.
225 KING STREET
WEST TORONTO, ON,
M5V 3M2 CANADA
SPIN MASTER
INTERNATIONAL B.V.,
KINGSFORDWEG 151,
1043 GR AMSTERDAM,
THE NETHERLANDS

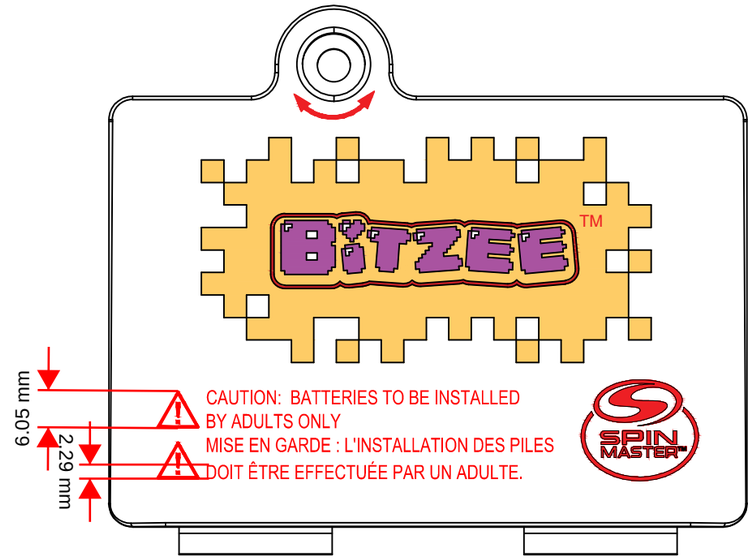
BITZEE™
6.05 mm
2.29 mm
CAUTION: BATTERIES TO BE INSTALLED
BY ADULTS ONLY
MISE EN GARDE : L'INSTALLATION DES PILES
DOIT ÊTRE EFFECTUÉE PAR UN ADULTE.
SPIN MASTER™

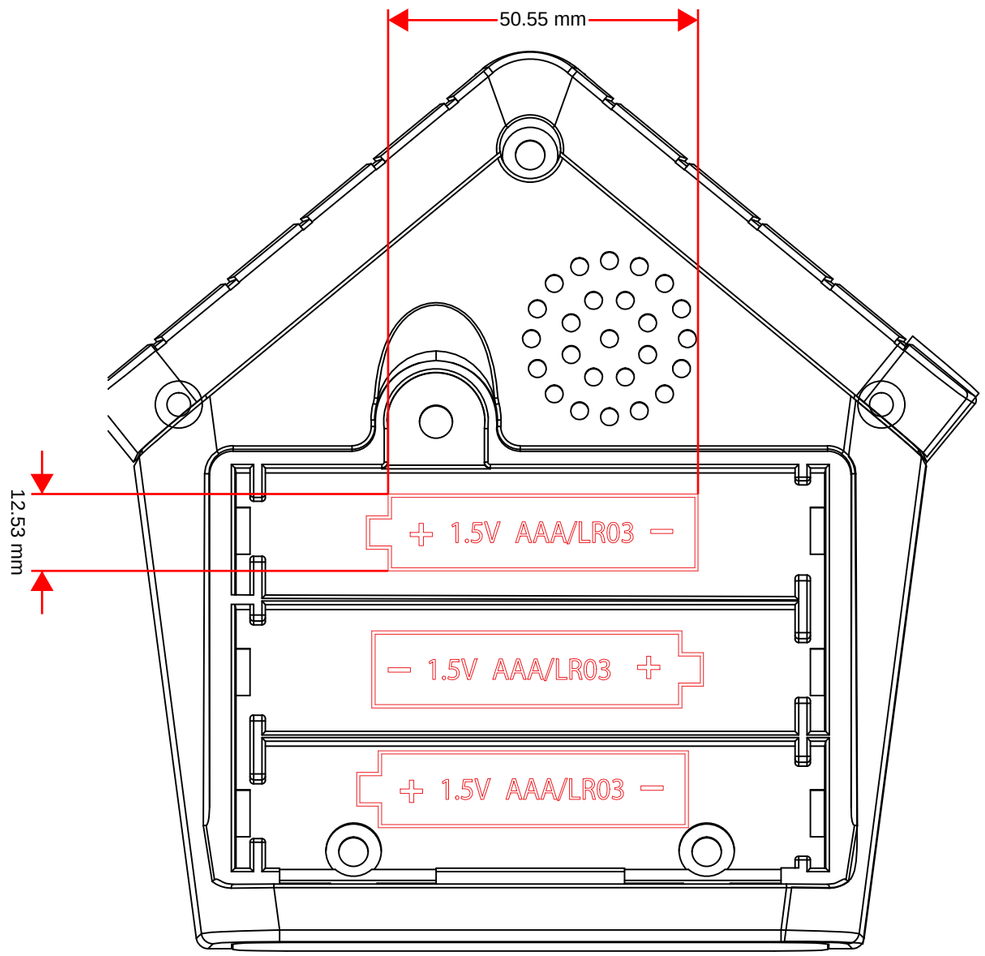
50.55 mm
12.53 mm
+ 1.5V AAA/LR03 −
− 1.5V AAA/LR03 +
+ 1.5V AAA/LR03 −

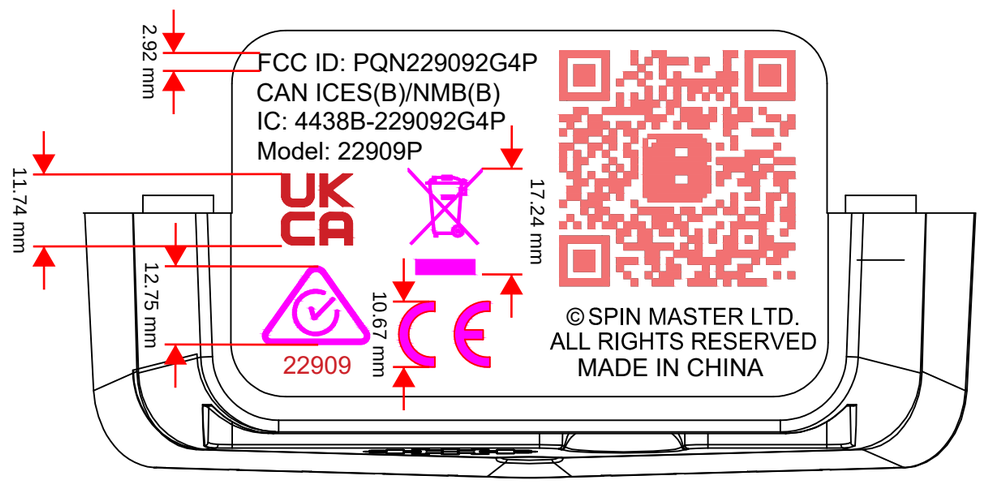
2.92 mm
FCC ID: PQN229092G4P
CAN ICES(B)/NMB(B)
IC: 4438B-229092G4P
Model: 22909P
11.74 mm
17.24 mm
12.75 mm
10.67 mm
22909
© SPIN MASTER LTD.
ALL RIGHTS RESERVED
MADE IN CHINA