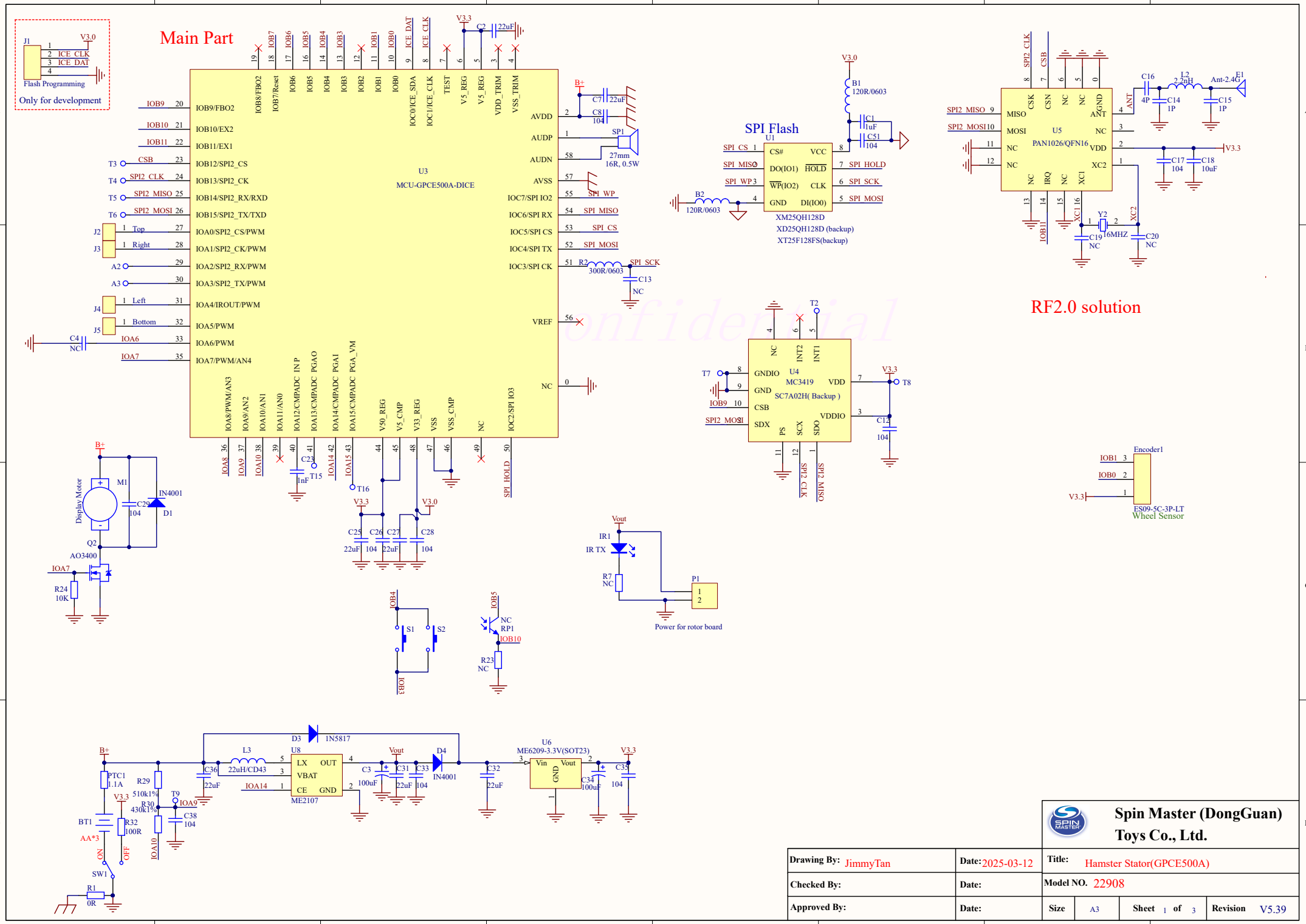
Main Part
Flash Programming
Only for development
U3
MCU-GPCE500A-DICE
SPI Flash
U1
XM25QH128D
XD25QH128D (backup)
XT25F128FS(backup)
RF2.0 solution
U5
PAN1026/QFN16
U4
MC3419
SC7A02H(Backup)
Confidential
Display Motor
Encoder1
ES09-5C-3P-LT
Wheel Sensor
Power for rotor board
U8
ME2107
U6
ME6209-3.3V(SOT23)
Spin Master (DongGuan) Toys Co., Ltd.
Drawing By: JimmyTan
Date: 2025-03-12
Title: Hamster Stator(GPCE500A)
Checked By:
Date:
Model NO. 22908
Approved By:
Date:
Size A3
Sheet 1 of 3
Revision V5.39

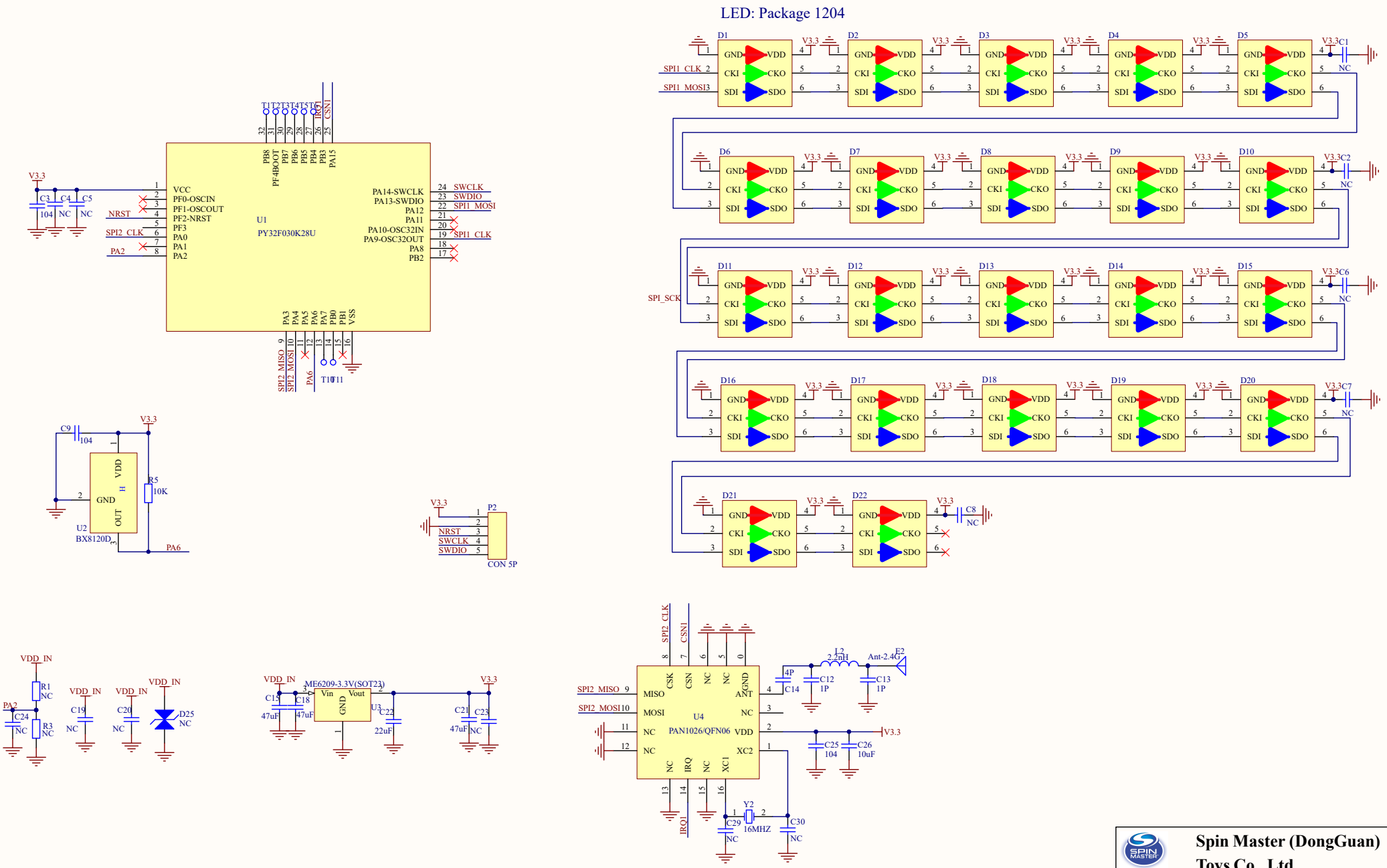

Spin Master (DongGuan) Toys Co., Ltd.					
Drawing By: JimmyTan	Date: 2025-03-12	Title: Hamster Ball -Rotor			
Checked By:	Date:	Model NO. 22908			
Approved By:	Date:	Size A3	Sheet 2 of 3	Revision V5.39	