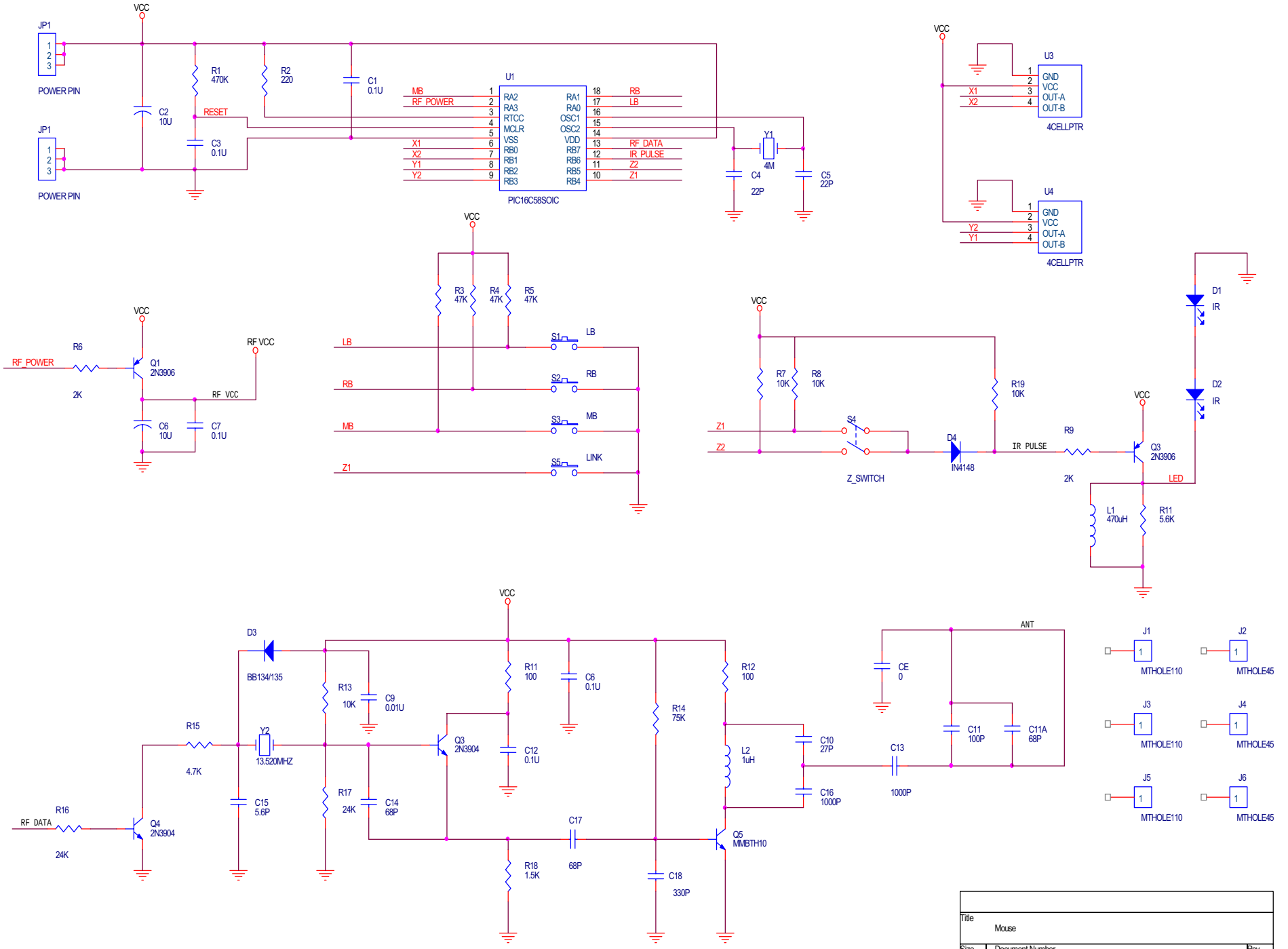
VCC
JP1
POWER PIN
JP1
POWER PIN
R1
470K
R2
220
C1
0.1U
C2
10U
C3
0.1U
RESET
U1
PIC16C58SOIC
MB
RF_POWER
X1
X2
Y1
Y2
RA2
RA3
RTCC
MCLR
VSS
RB0
RB1
RB2
RB3
RA1
RA0
OSC1
OSC2
VDD
RB7
RB6
RB5
RB4
RB
LB
RF_DATA
IR_PULSE
Z2
Z1
Y1
4M
C4
22P
C5
22P
U3
4CELLPTR
U4
4CELLPTR
GND
VCC
OUT-A
OUT-B
R6
2K
Q1
2N3906
RF_POWER
RF VCC
C6
10U
C7
0.1U
R3
47K
R4
47K
R5
47K
S1
S2
S3
S5
LB
RB
MB
LINK
R7
10K
R8
10K
R19
10K
S4
Z_SWITCH
D4
IN4148
IR_PULSE
R9
2K
Q3
2N3906
LED
D1
IR
D2
IR
L1
470uH
R11
5.6K
D3
BB134/135
R13
10K
C9
0.01U
R15
4.7K
Y2
13.520MHZ
Q3
2N3904
R11
100
C6
0.1U
C12
0.1U
R14
75K
R12
100
L2
1uH
C10
27P
C16
1000P
C13
1000P
CE
0
ANT
C11
100P
C11A
68P
R16
24K
RF_DATA
Q4
2N3904
C15
5.6P
R17
24K
C14
68P
C17
68P
R18
1.5K
C18
330P
Q5
MMBTH10
J1
MTHOLE110
J2
MTHOLE45
J3
MTHOLE110
J4
MTHOLE45
J5
MTHOLE110
J6
MTHOLE45
Title
Mouse
Size
B
Document Number
<Doc>
Rev
<RevCode>
Date:
Tuesday, July 03, 2001
Sheet
1
of
1