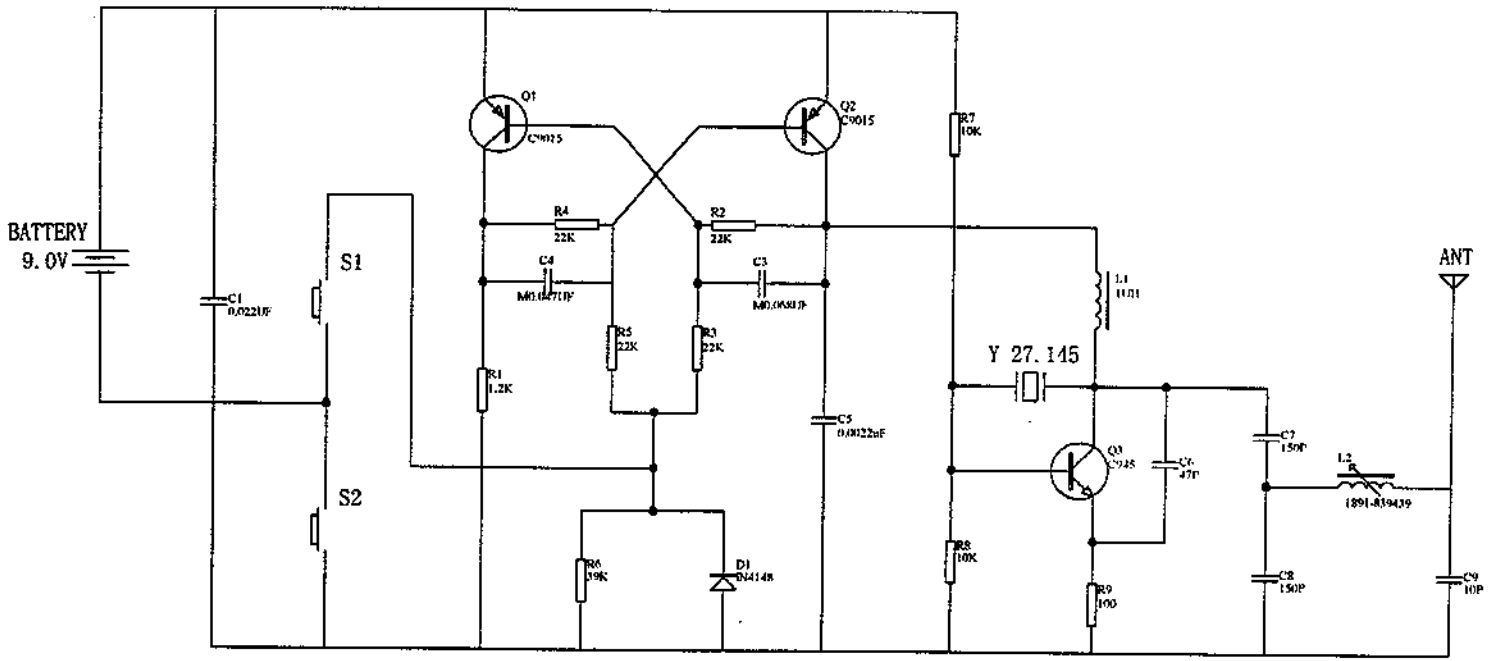

Title	7439AT		
Size B	Number 27.145MHZ		Revision 02
Date: 16-Mar-2002		Sheet of	
File: A:\3106-4AT.sch		Drawn By:	

7439