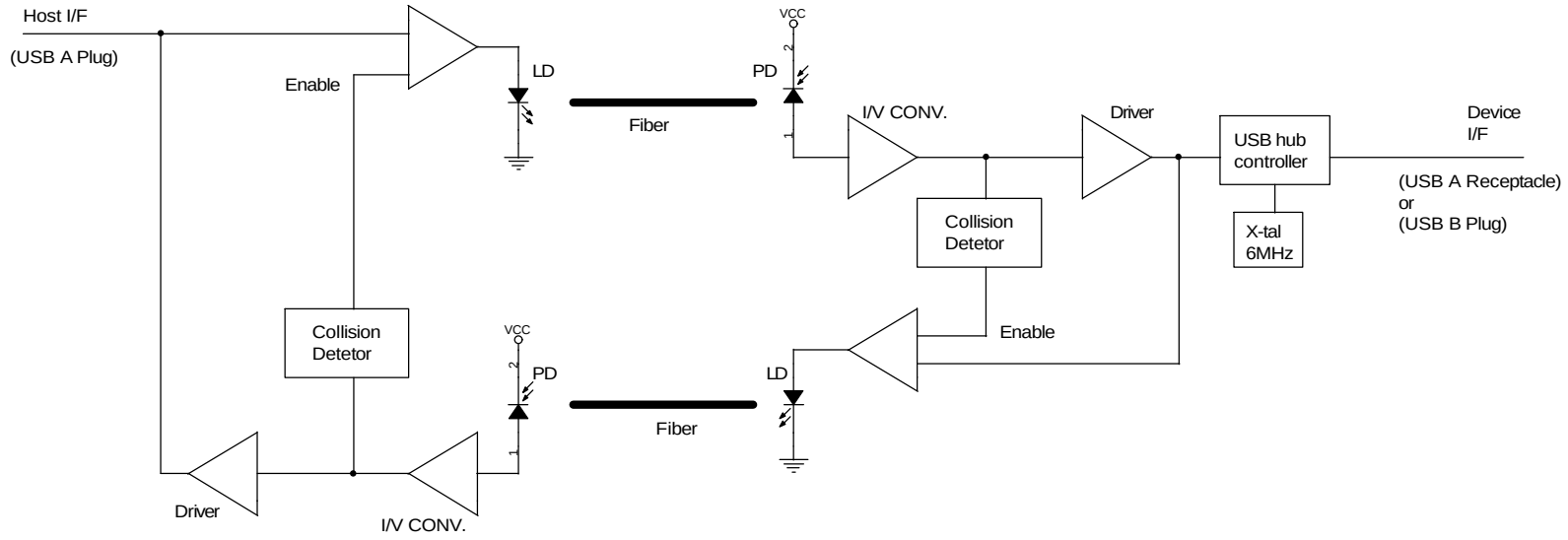

Title <Title>		
Size B	Document Number <Doc>	Rev <RevCode>
Date: Tuesday, June 26, 2001	Sheet 1 of 1	