PCB-A

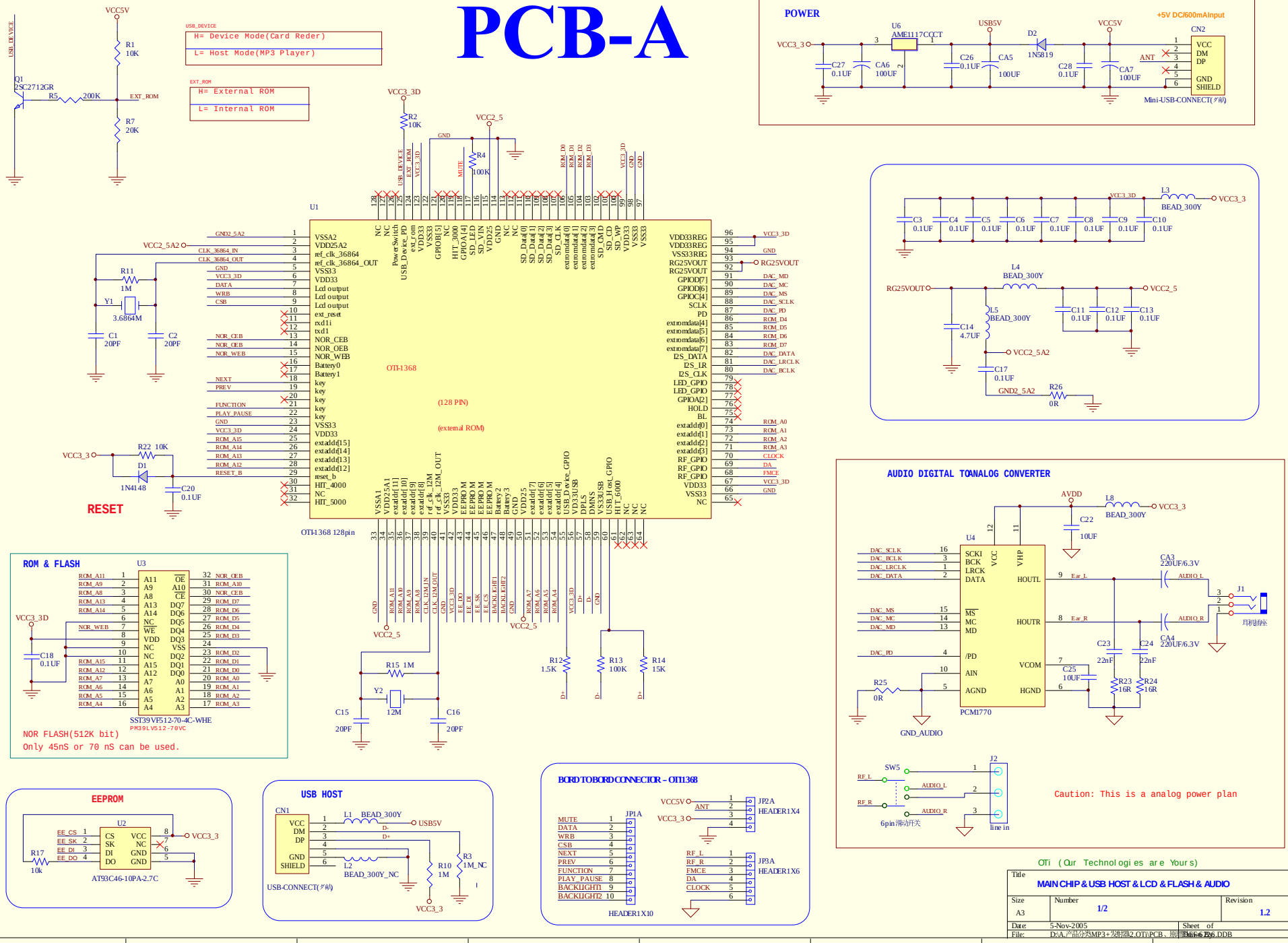
USB_DEVICE
H= Device Mode(Card Reder)
L= Host Mode(MP3 Player)
EXT_ROM
H= External ROM
L= Internal ROM
POWER
+5V DC/600mAInput
Mini-USB-CONNECT(夕阳)
OTI-1368
(128 PIN)
(external ROM)
OTI-1368 128pin
RESET
ROM & FLASH
SST39VF512-70-4C-WHE
PM39LV512-70VC
NOR FLASH(512K bit)
Only 45nS or 70 nS can be used.
EEPROM
AT93C46-10PA-2.7C
USB HOST
USB-CONNECT(夕阳)
BORD TO BORD CONNECTOR - OTI1368
HEADER1X10
HEADER1X4
HEADER1X6
AUDIO DIGITAL TO ANALOG CONVERTER
PCM1770
耳机插座
6pin滑动开关
line in
Caution: This is a analog power plan
OTi (Our Technologies are Yours)
Title
MAIN CHIP & USB HOST & LCD & FLASH & AUDIO
Size A3
Number 1/2
Revision 1.2
Date 5-Nov-2005
Sheet of
File: D:\A产品方案\MP3+处理器2.OTI\PCB、原理图\Sheet6.DDB

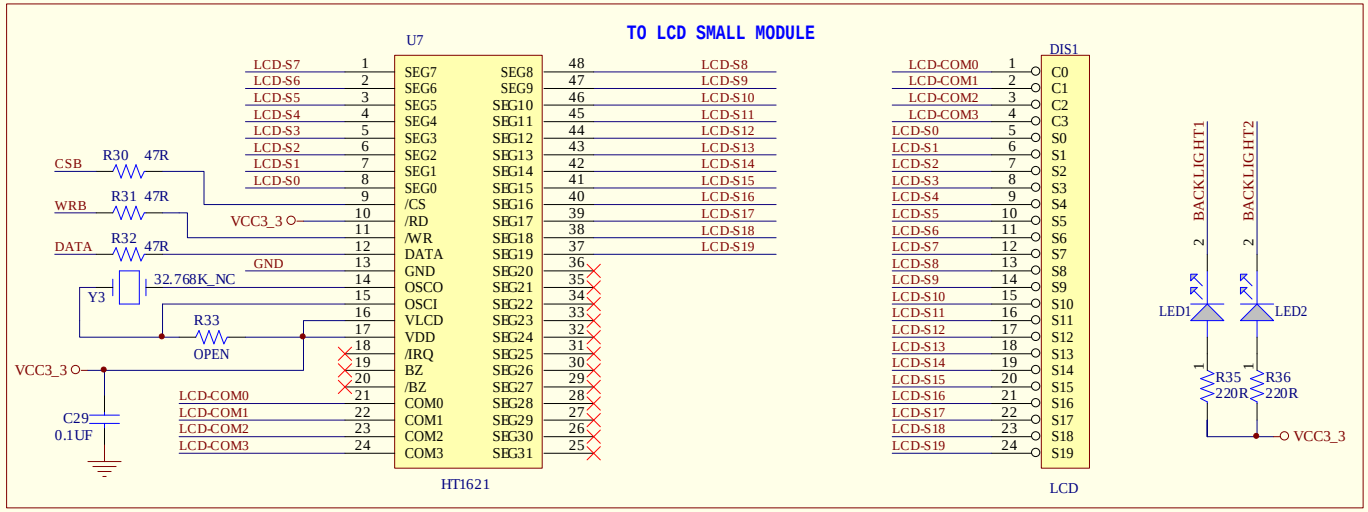

PCB-B

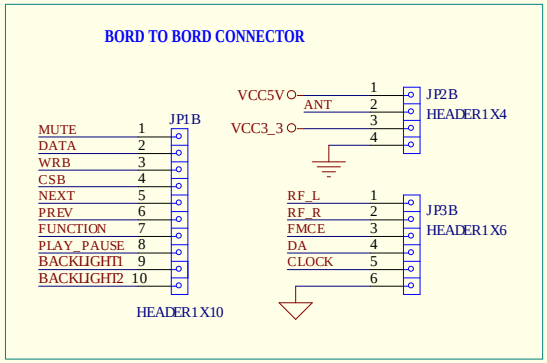

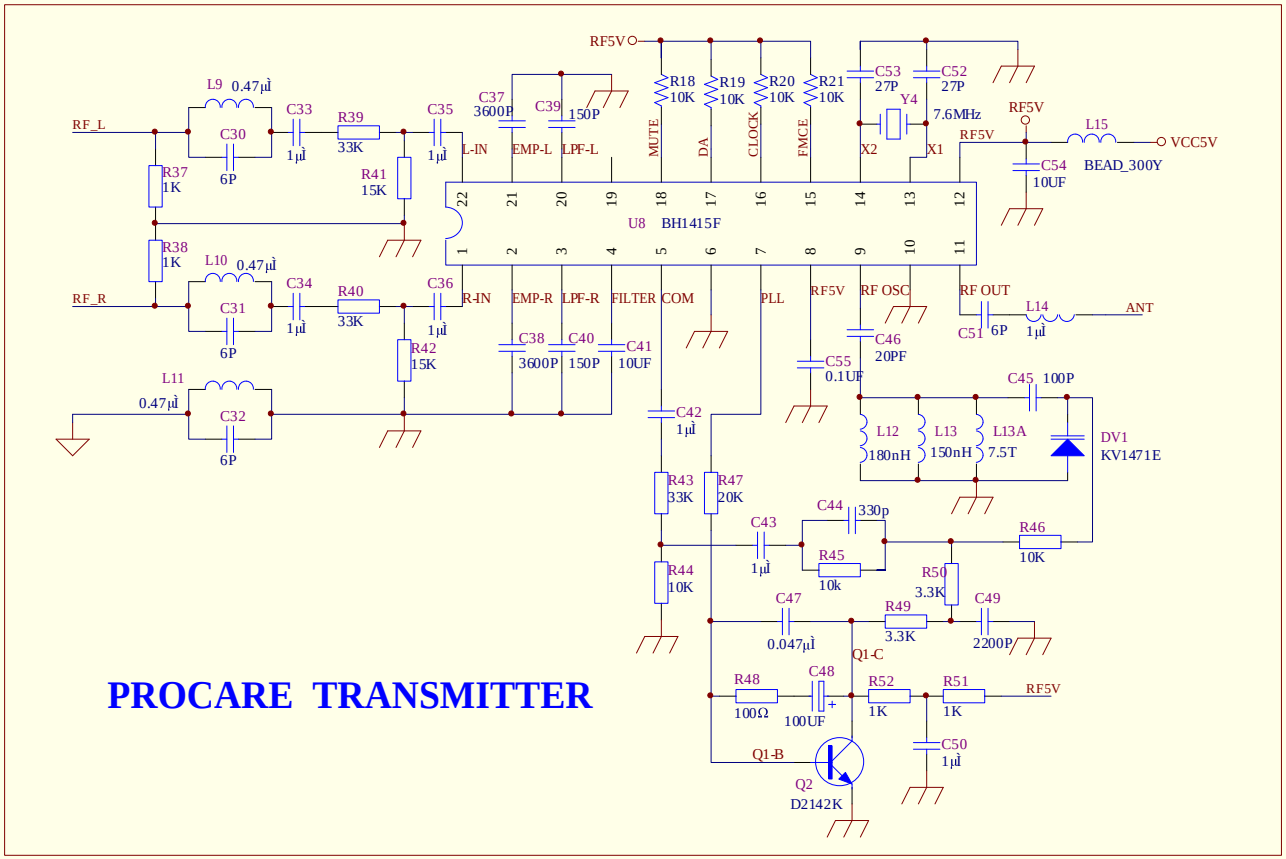

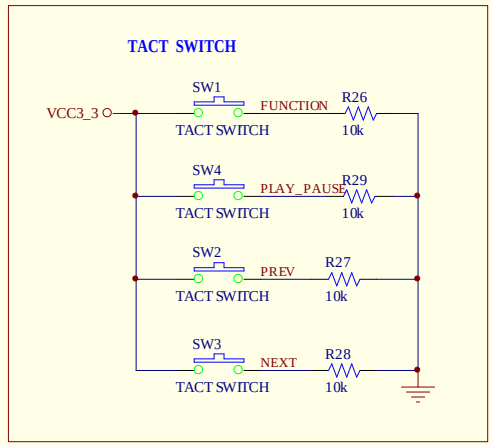

Title	TRANSMITTER & SWITCH & LCD	
Size A3	Number 2/2	Revision 1.0
Date: 5-Nov-2005	Sheet of	
File: D:\A.产品分类\MP3+发射器2.OT\PCB、原理图\EE-6226.DDB	Drawn by:	