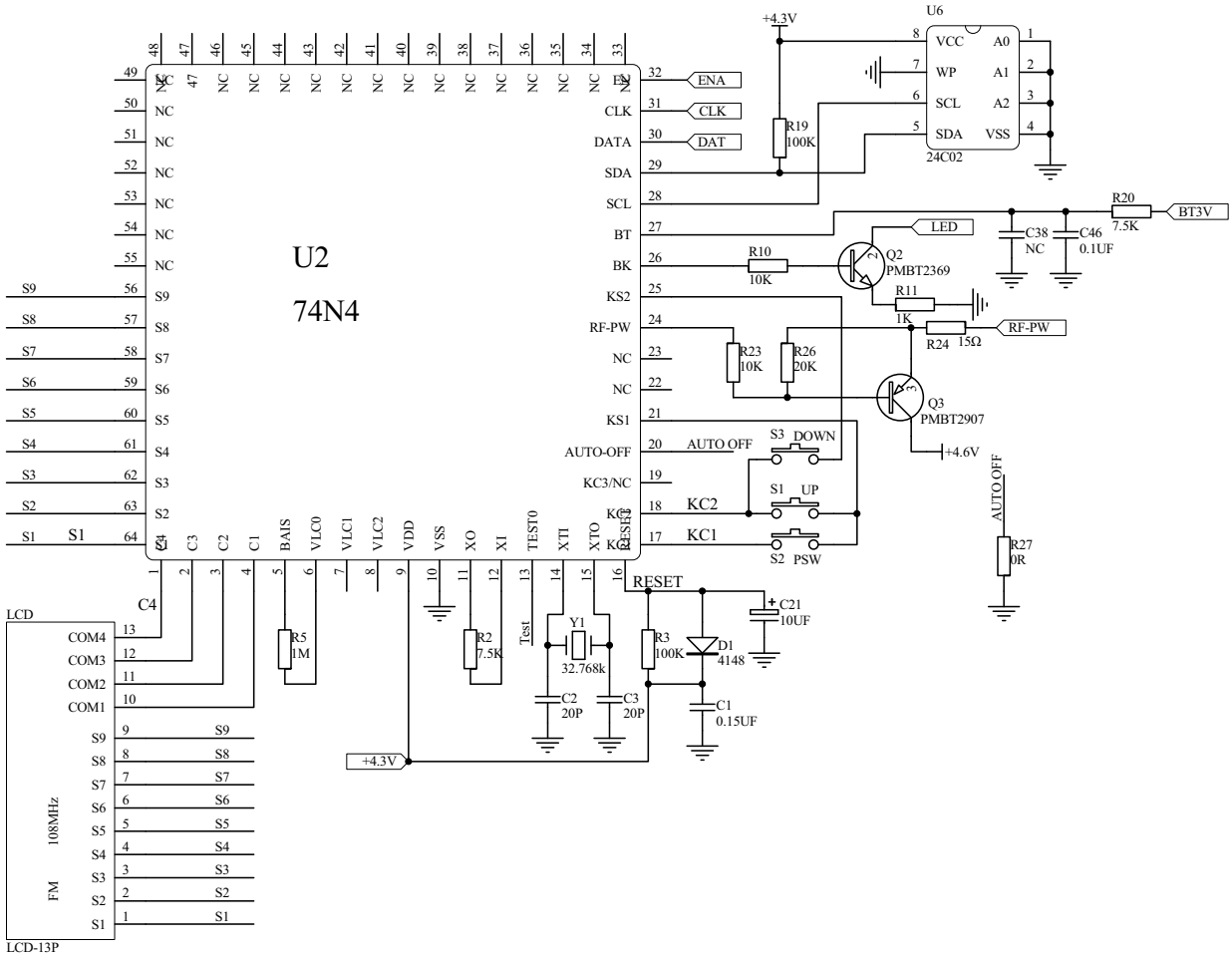


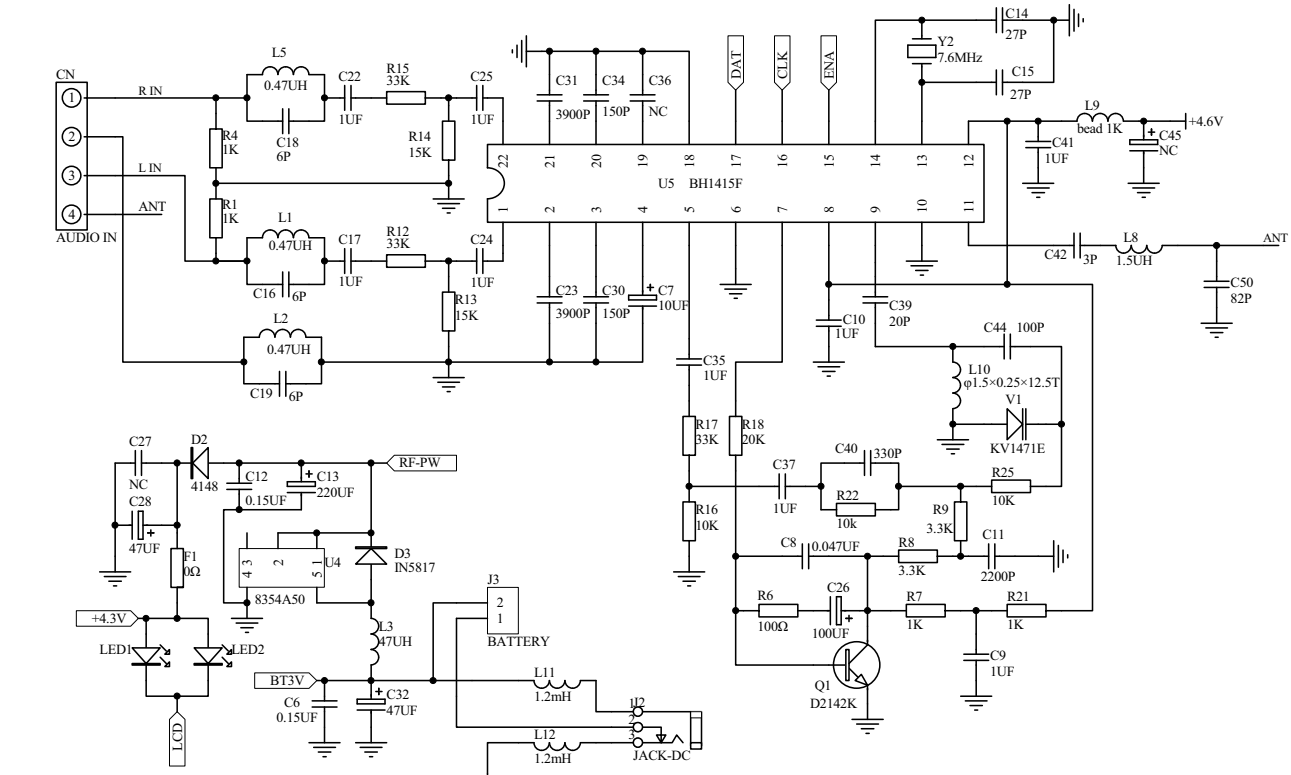


NC: No Component

| | | | | | |
|---|---|---|---|---|---|
| Title: | ***EF6209/C FCC*** | | | *Organization* | *特嘉科技数位（惠州）有限公司* |
| Size: | A4 | Number: 1 | Revision: 1.3 | *Address* | *惠州市小金口镇柏岗工业区* |
| Date: | 16-Sep-2009 | Time: 11:41:04 | Sheet 1 of 1 | *Desing By* | *游明荣* |
| File: | G:\SCHandPCB\原理图和PCB档案等重要资料备份\SCHandPCB\bby\bby.ddb - Documents\EF6209C\SCH\EF6209C-01E-FCC.SCH | | | | *7655249* |