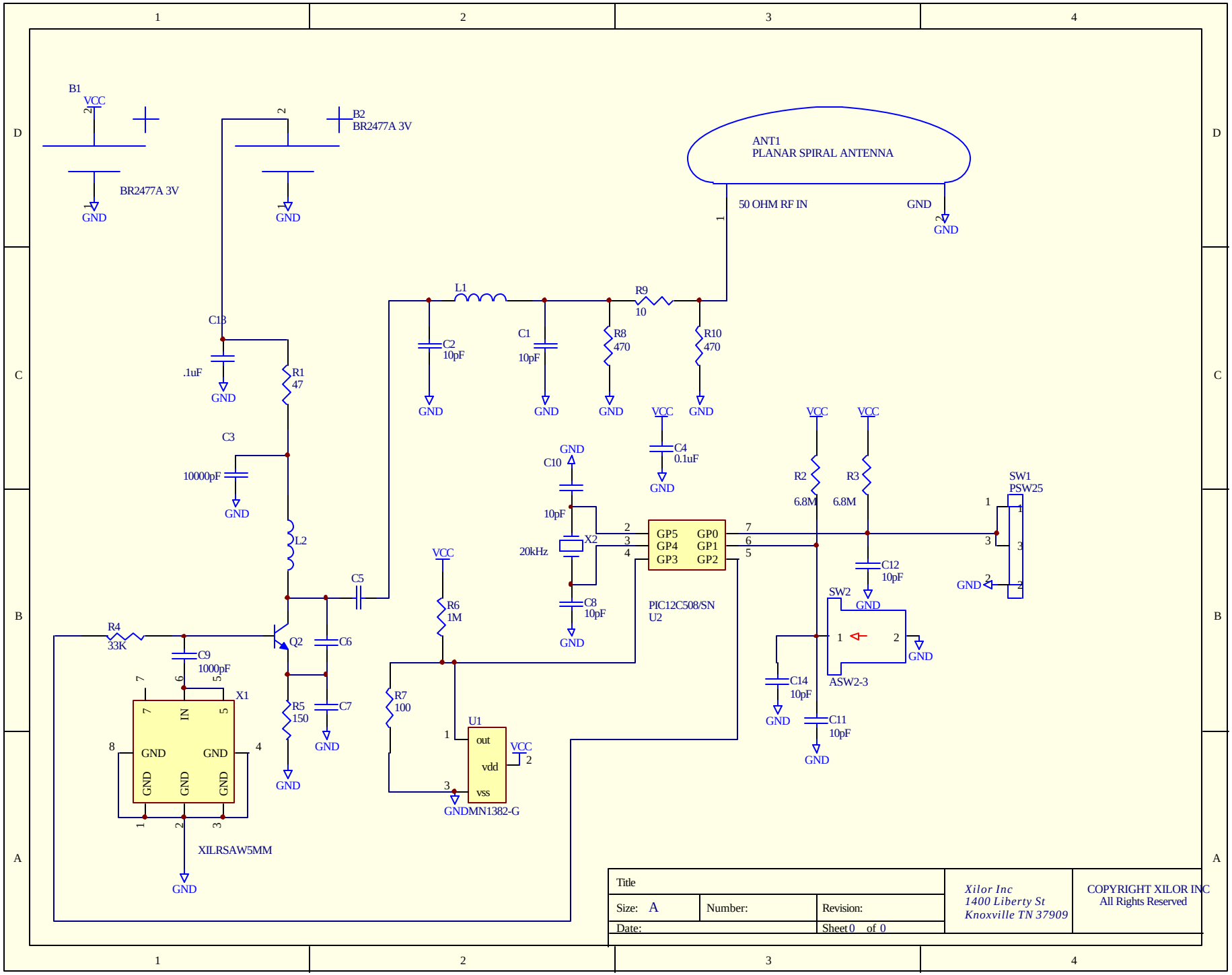
B1
VCC
BR2477A 3V
GND
B2
BR2477A 3V
ANT1
PLANAR SPIRAL ANTENNA
50 OHM RF IN
GND
L1
R9
10
C2
10pF
C1
10pF
R8
470
R10
470
C13
.1uF
R1
47
C3
10000pF
L2
C5
C6
C7
R5
150
Q2
R4
33K
C9
1000pF
X1
IN
GND
XILRSAW5MM
C4
0.1uF
C10
10pF
X2
20kHz
C8
10pF
VCC
R6
1M
R7
100
U1
out
vdd
vss
MN1382-G
GP5
GP4
GP3
GP0
GP1
GP2
PIC12C508/SN
U2
R2
6.8M
R3
6.8M
C12
10pF
SW2
ASW2-3
C14
10pF
C11
10pF
SW1
PSW25
Title
Size: A
Number:
Revision:
Date:
Sheet 0 of 0
Xilor Inc
1400 Liberty St
Knoxville TN 37909
COPYRIGHT XILOR INC
All Rights Reserved