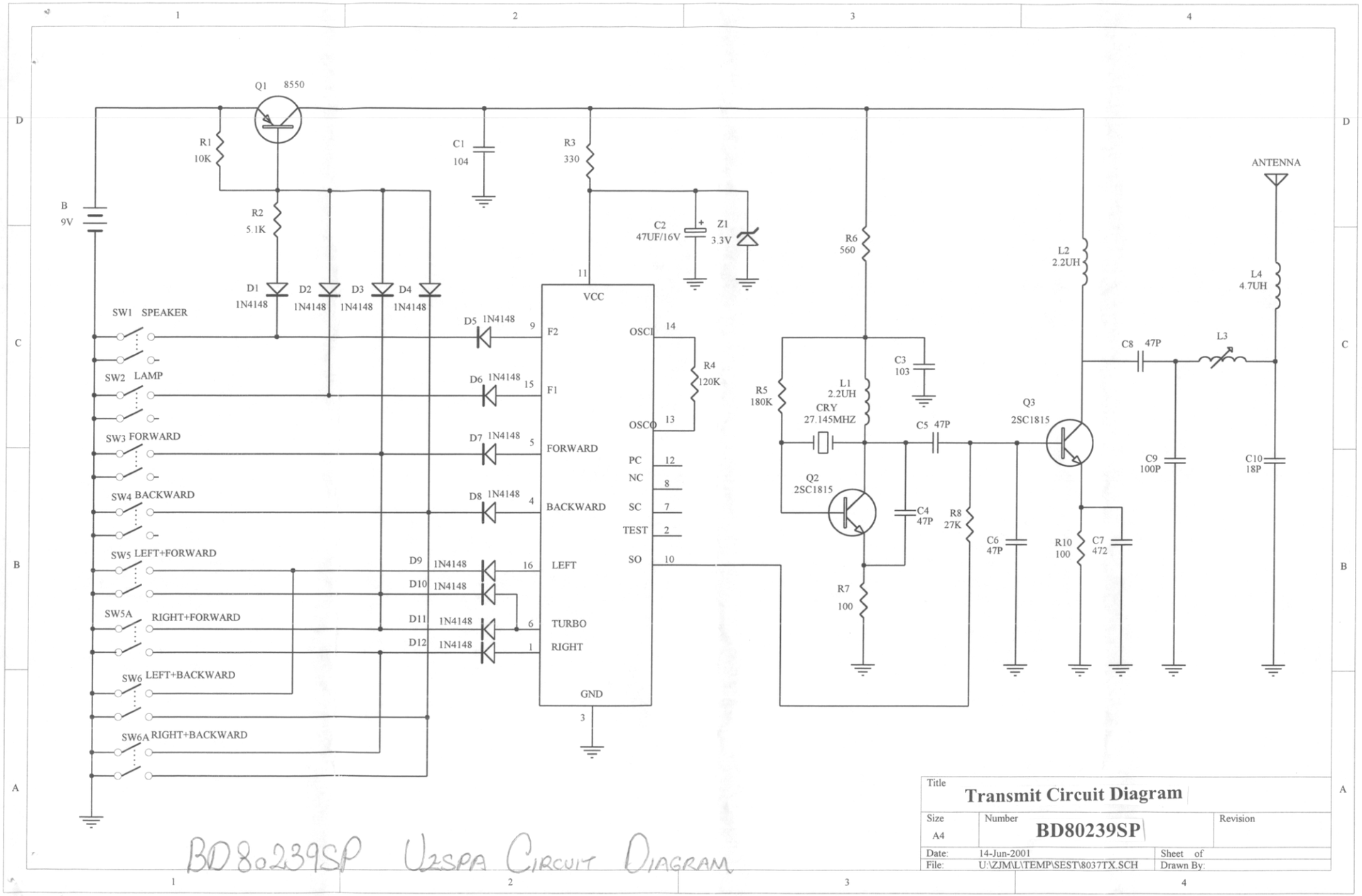

BD80239SP U2SPA CIRCUIT DIAGRAM

Title: **Transmit Circuit Diagram**		
Size: A4	Number: **BD80239SP**	Revision
Date: 14-Jun-2001		Sheet of
File: U:\ZJM\L\TEMP\SEST\8037TX.SCH		Drawn By: