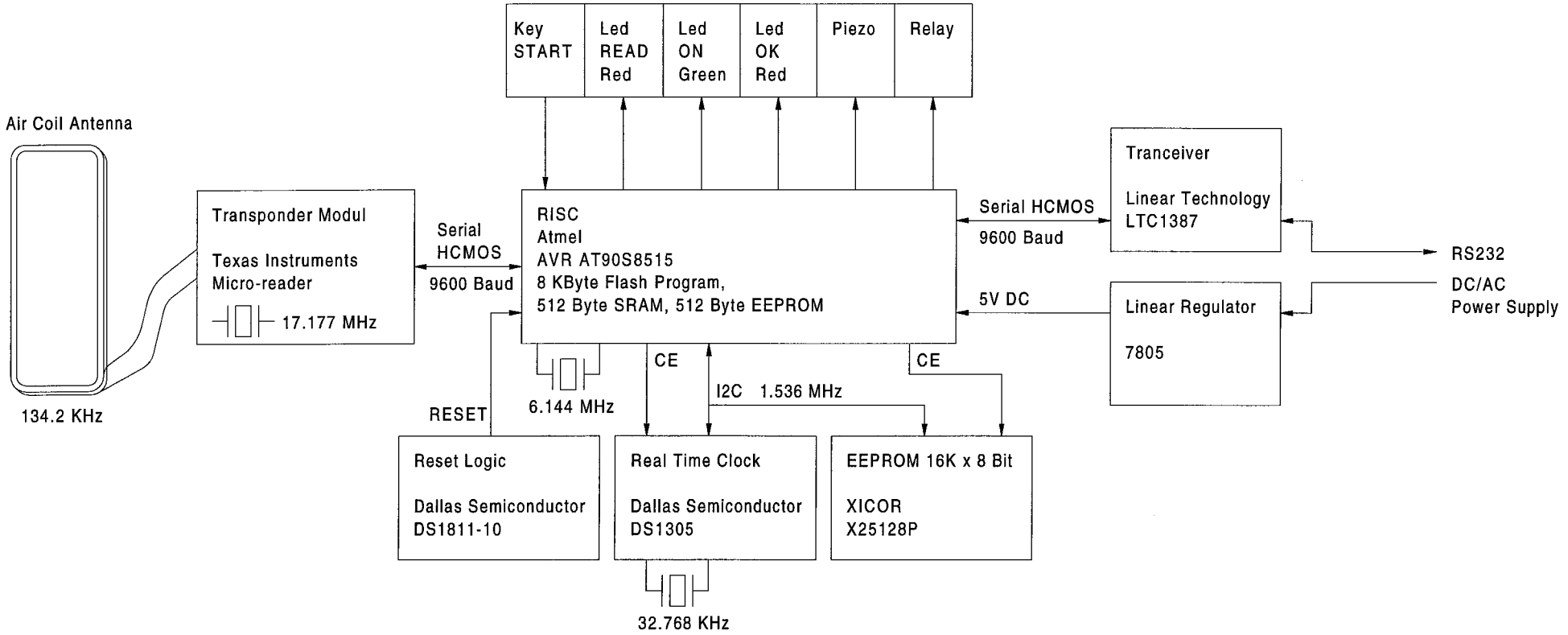

changes:	title: MICROSCAN block diagram
	DTE Automation GmbH
	c4000105.fcw
	A.Rehsöft 04.04.01
	1 of 1