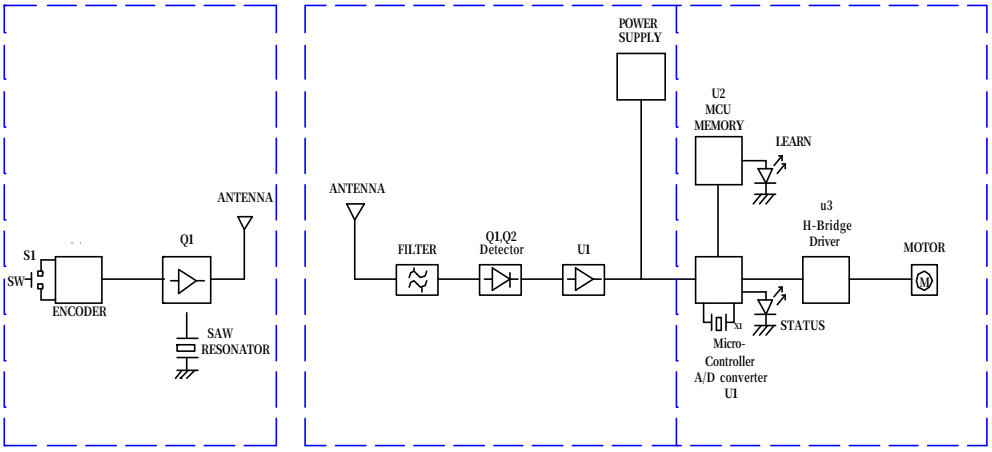

TRANSMITTER RECEIVER CONTROLLER

Title		
Size	Number BLOCK DIAGRAM OF 313899	Revision
Date:		Sheet of
File:		Drawn By:

Jaeger Inc.