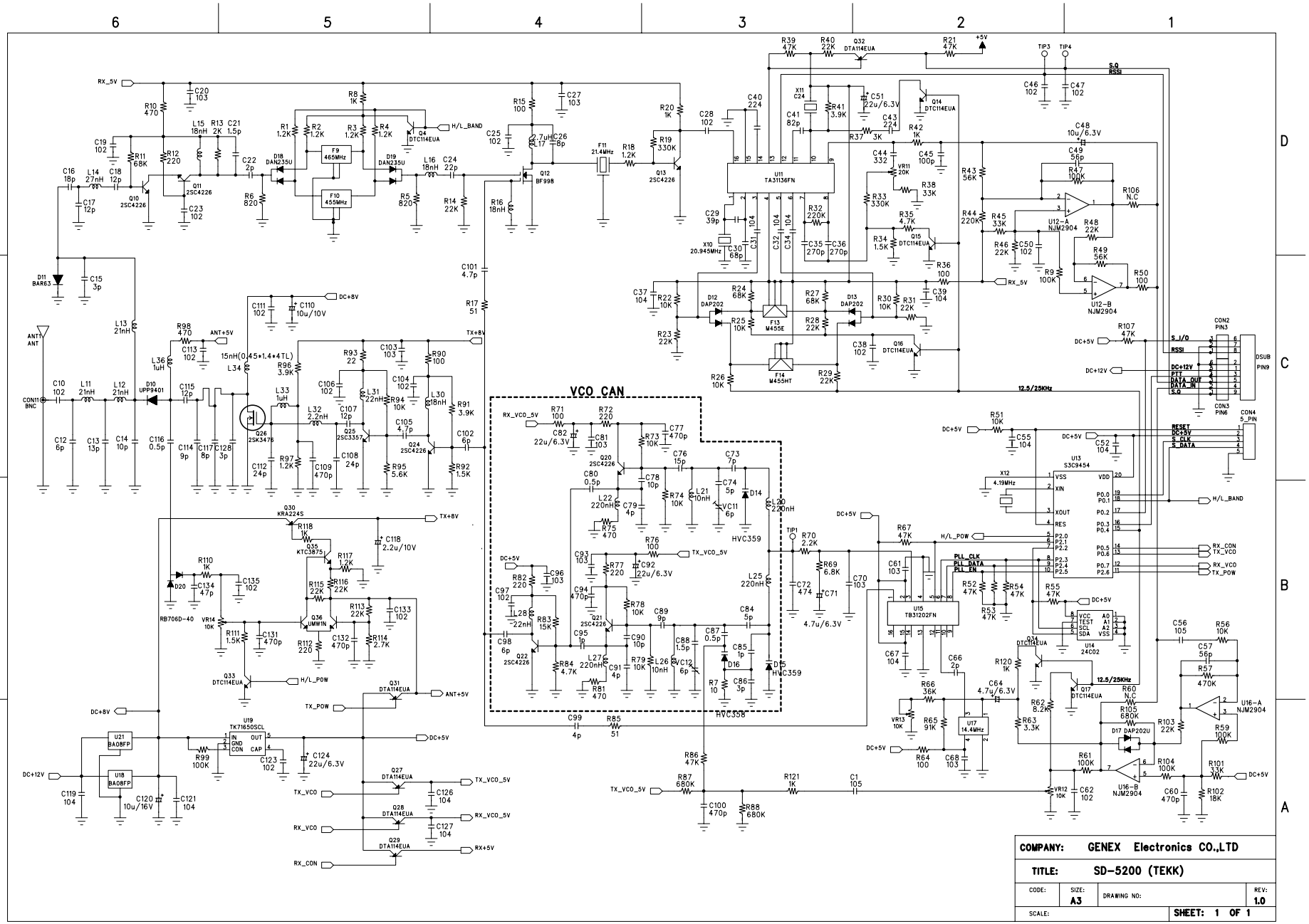
VCO CAN
COMPANY: GENEX Electronics CO.,LTD
TITLE: SD-5200 (TEKK)
CODE:
SIZE: A3
DRAWING NO:
REV: 1.0
SCALE:
SHEET: 1 OF 1