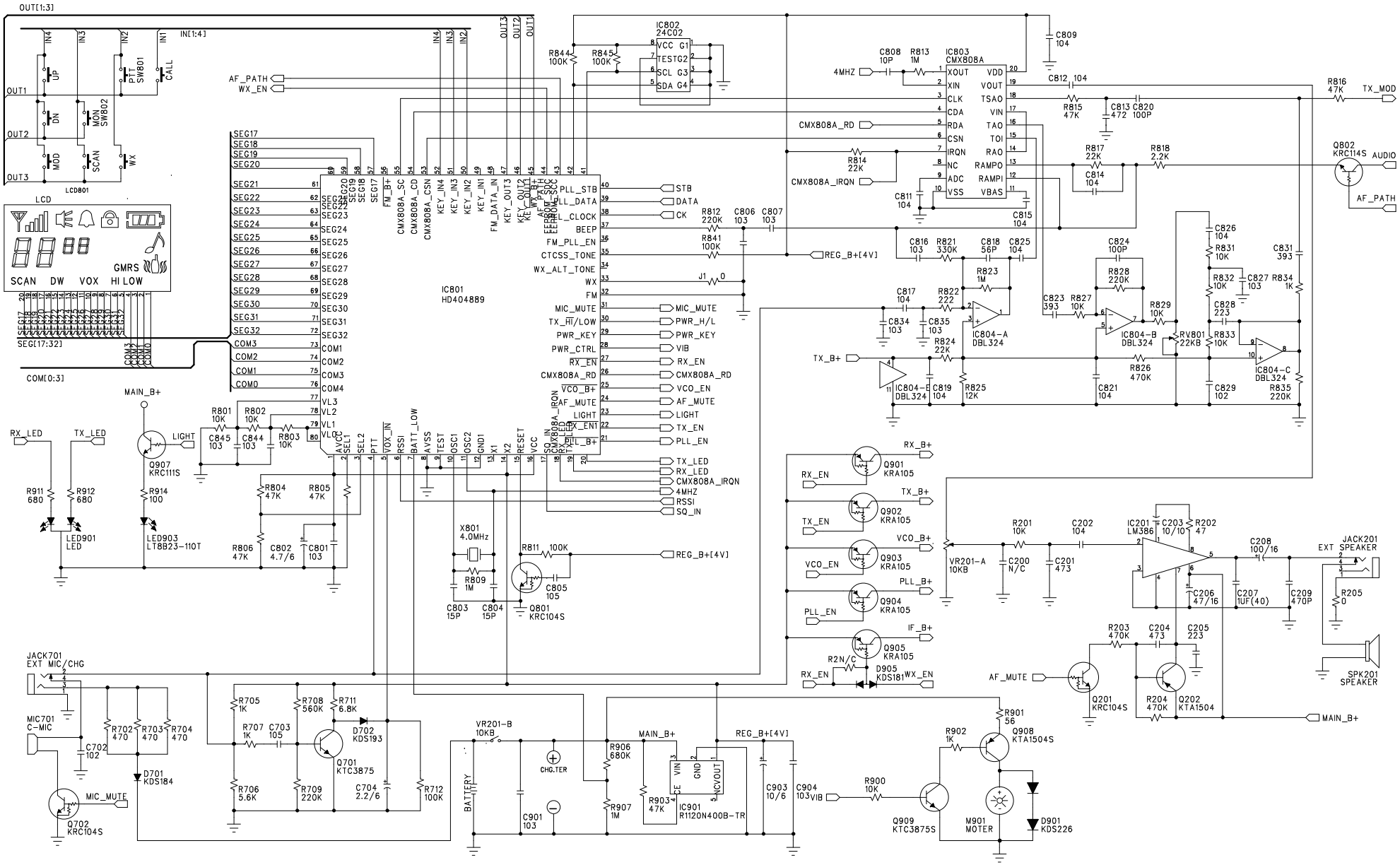

MAXTRYCOM CO., LTD				
TITLE : GR-2000(Logic)				
DRAWN	CHECKED	CHECKED	APPROVED	SHEET
S.H.KWON				2 OF 2
				REV
2001.4.23.				01