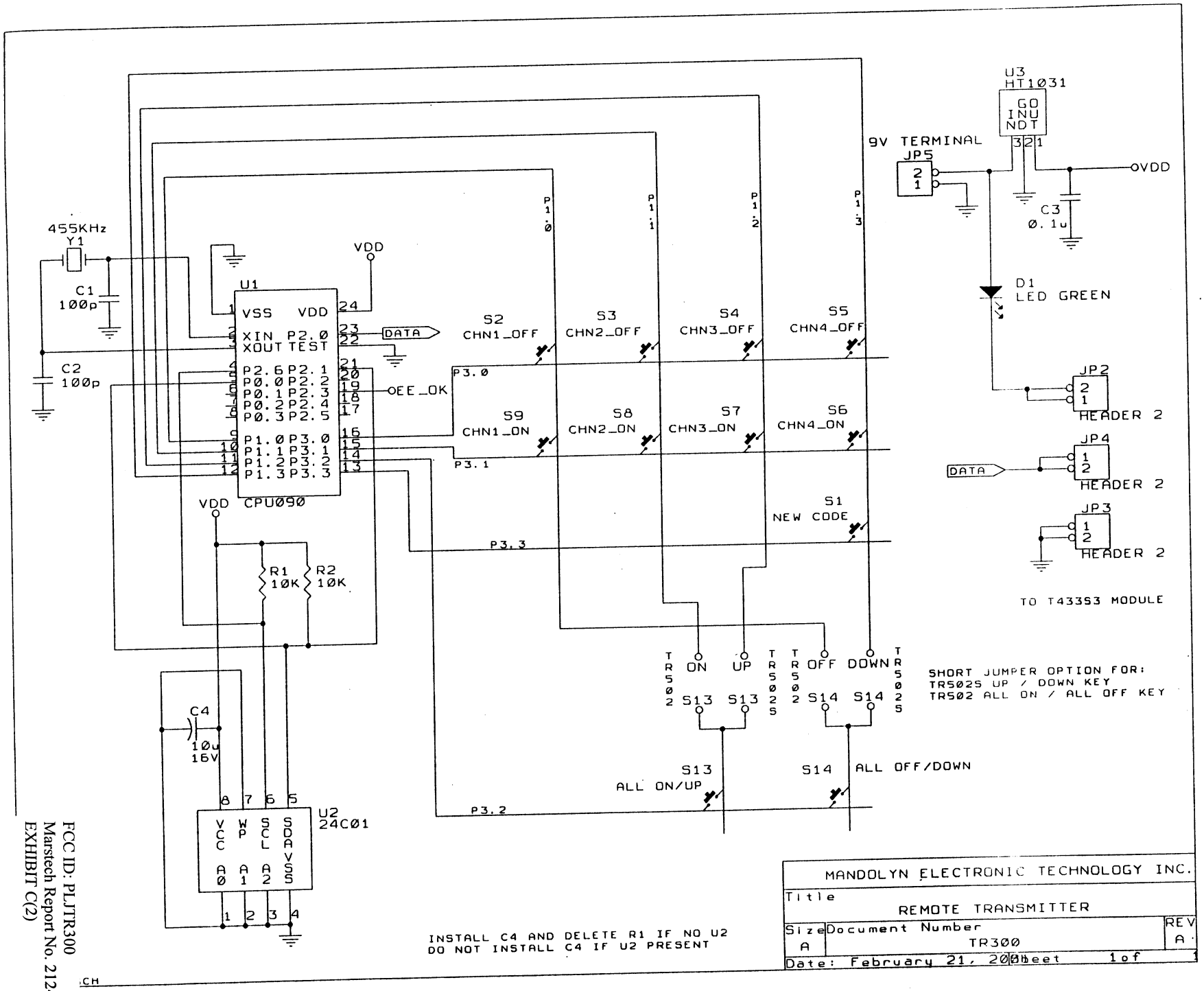

FCC ID: PLJTR300
Marstech Report No. 212245D
EXHIBIT C(2)