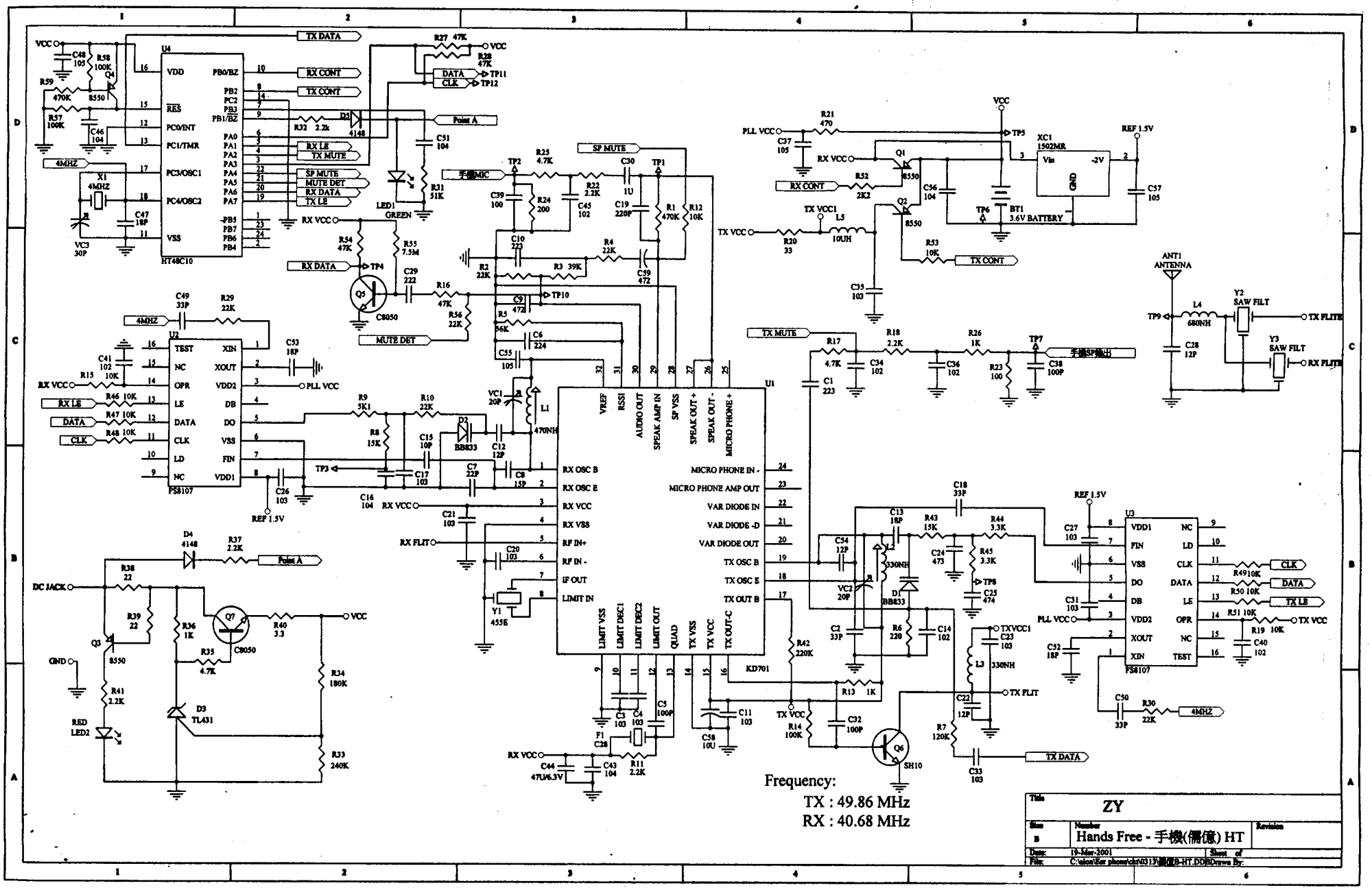
U4
HT48C10
U2
PS8107
U1
KD701
U3
PS8107
XC1
1502MR
BT1
3.6V BATTERY
ANT1
ANTENNA
Y2
SAW FILT
Y3
SAW FILT
TX FLITE
RX FLITE
TX DATA
RX CONT
TX CONT
RX DATA
MUTE DET
TX MUTE
SP MUTE
Point A
4MHZ
REF 1.5V
PLL VCC
RX VCC
TX VCC
VCC
DC JACK
GND
RED
LED2
LED1
GREEN
Q3
8550
Q7
C8050
D3
TL431
Q6
SH10
Y1
455E
F1
CLK
DATA
TX LE
TX VCC
TX FLIT
Frequency:
TX : 49.86 MHz
RX : 40.68 MHz
Title
ZY
Size
B
Number
Revision
Hands Free - 手機(耳機) HT
Date: 19-Mar-2001
Sheet of
File: C:\alon\Ear phone\ch\0313\耳機B-HT.DDB
Drawn By: