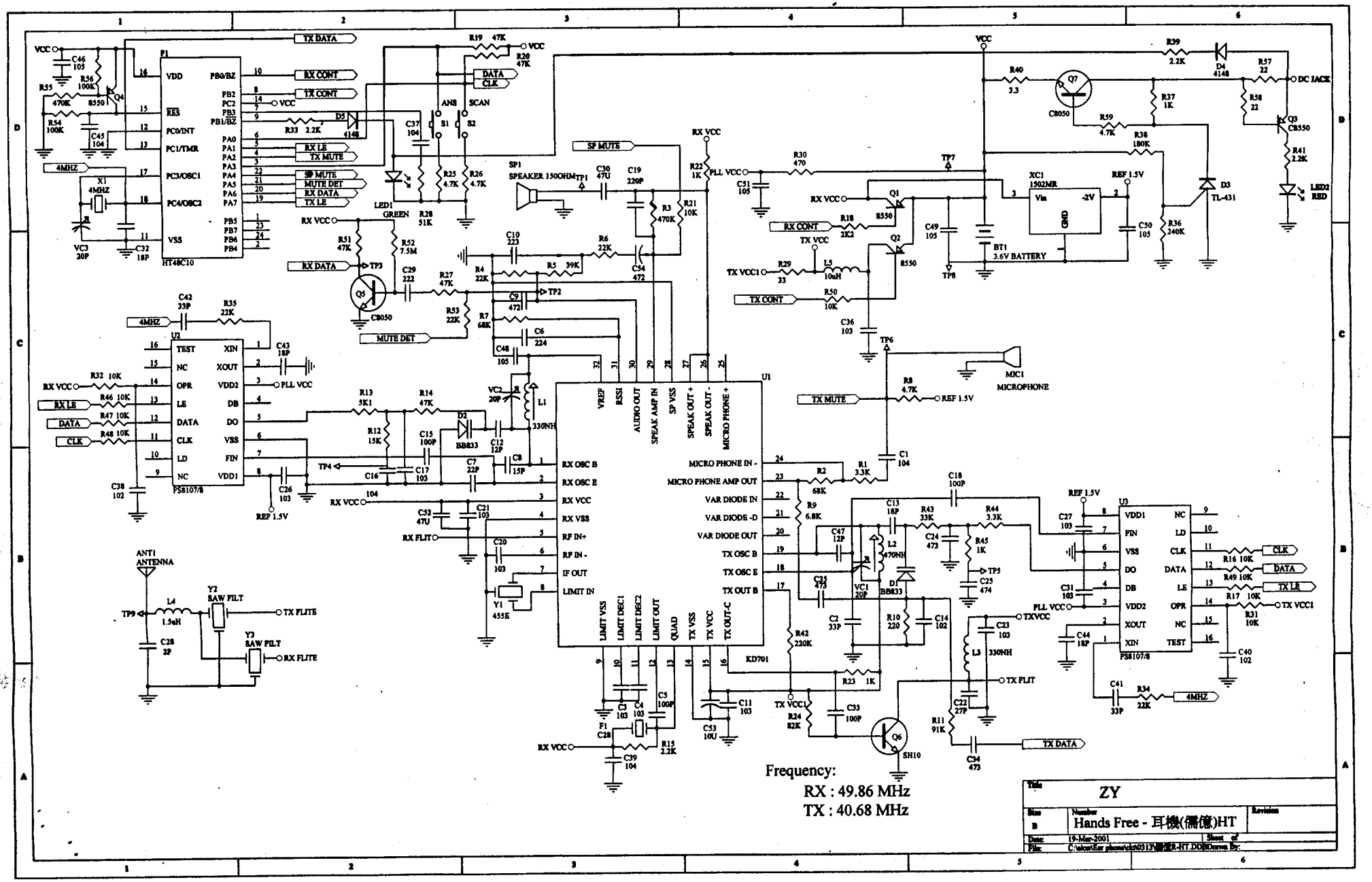
P1
HT48C10
U1
KD701
U2
FS8107/8
U3
FS8107/8
XC1
1502MR
BT1
3.6V BATTERY
SP1
SPEAKER 150OHM
MIC1
MICROPHONE
DC JACK
ANT1
ANTENNA
Y2
SAW FILT
Y3
SAW FILT
Y1
455E
F1
X1
4MHZ
TX DATA
RX CONT
TX CONT
RX LE
TX MUTE
SP MUTE
MUTE DET
RX DATA
TX LE
DATA
CLK
SCAN
RX FLIT
TX FLIT
TX DATA
TX VCC1
TX VCC
PLL VCC
REF 1.5V
LED1
GREEN
LED2
RED
Frequency:
RX : 49.86 MHz
TX : 40.68 MHz
Title
ZY
Size
B
Number
Hands Free - 耳機(傳輸)HT
Revision
Date: 19-Mar-2001
Sheet of
File:
Drawn By: