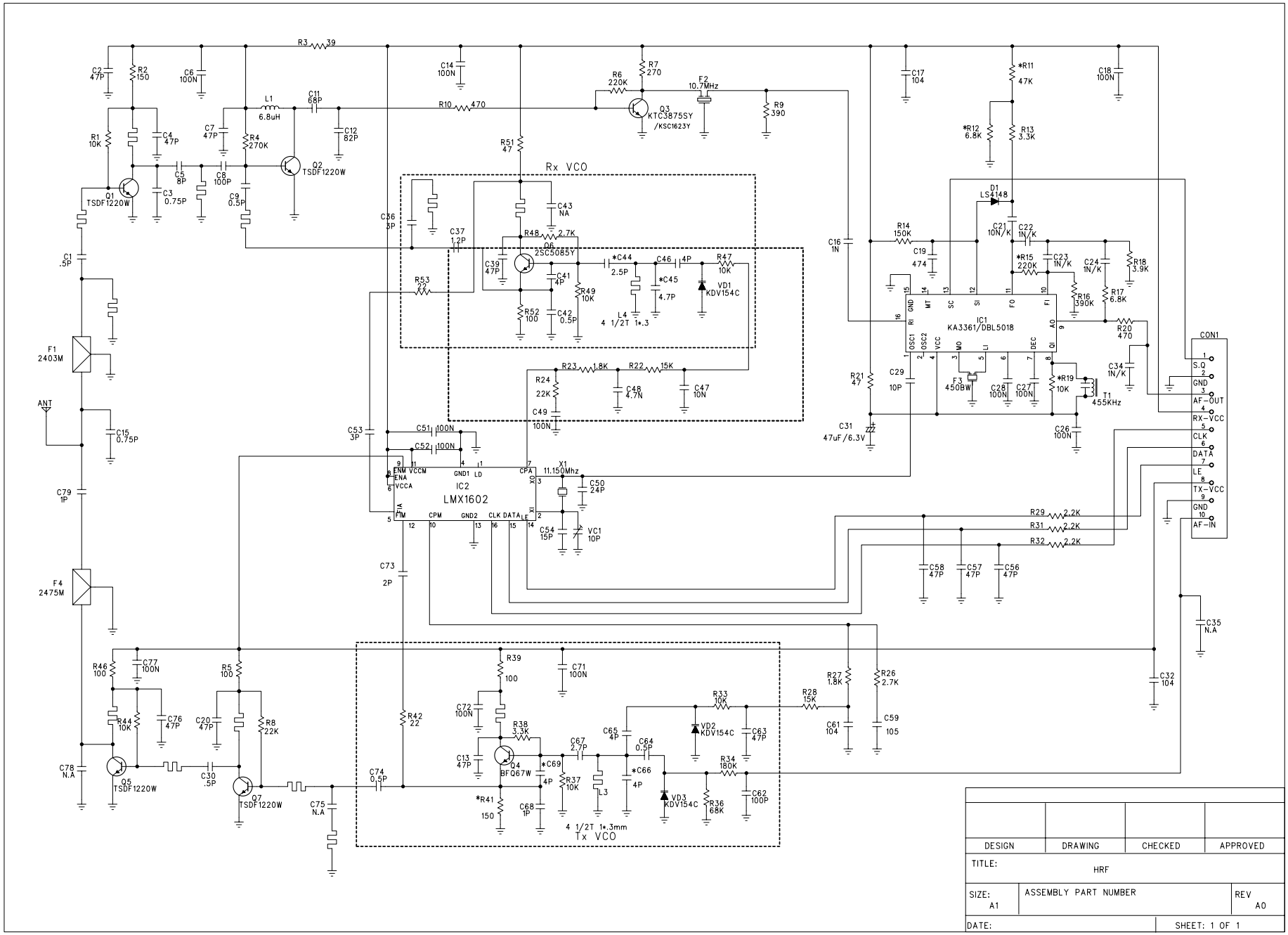
Rx VCO
Tx VCO
IC1
KA3361/DBL5018
IC2
LMX1602
CON1
S.Q
GND
AF-OUT
RX-VCC
CLK
DATA
LE
TX-VCC
GND
AF-IN
ANT
F1
2403M
F4
2475M
F2
10.7MHz
F3
450BW
T1
455KHz
X1
11.150Mhz
Q1
TSDF1220W
Q2
TSDF1220W
Q3
KTC3875SY
/KSC1623Y
Q4
BFQ67W
Q5
TSDF1220W
Q7
TSDF1220W
Q6
2SC5085Y
D1
LS4148
VD1
KDV154C
VD2
KDV154C
VD3
KDV154C
L1
6.8uH
L3
4 1/2T 1*.3mm
L4
4 1/2T 1*.3
VC1
10P
DESIGN
DRAWING
CHECKED
APPROVED
TITLE:
HRF
SIZE:
A1
ASSEMBLY PART NUMBER
REV
A0
DATE:
SHEET: 1 OF 1