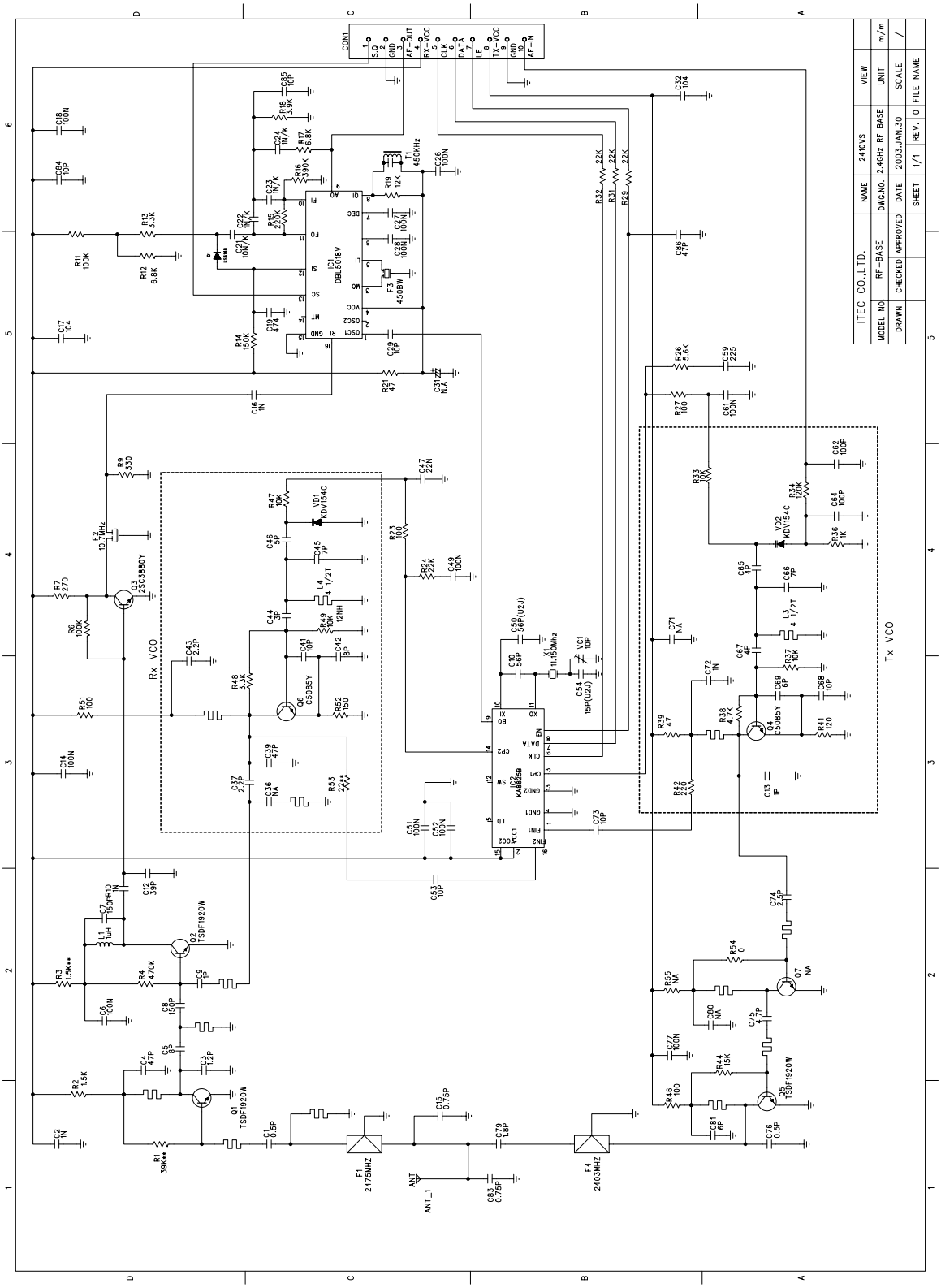
ITEC CO.,LTD.
MODEL NO. RF-BASE
DRAWN CHECKED APPROVED
NAME 2410VS
DWG.NO. 2.4GHz RF BASE
DATE 2003.JAN.30
SHEET 1/1
REV. 0
VIEW
UNIT m/m
SCALE /
FILE NAME
Rx VCO
Tx VCO
CON1
IC1 DBL501BV
IC2 KA3225B
F1 2475MHZ
F4 2403MHZ
ANT_1