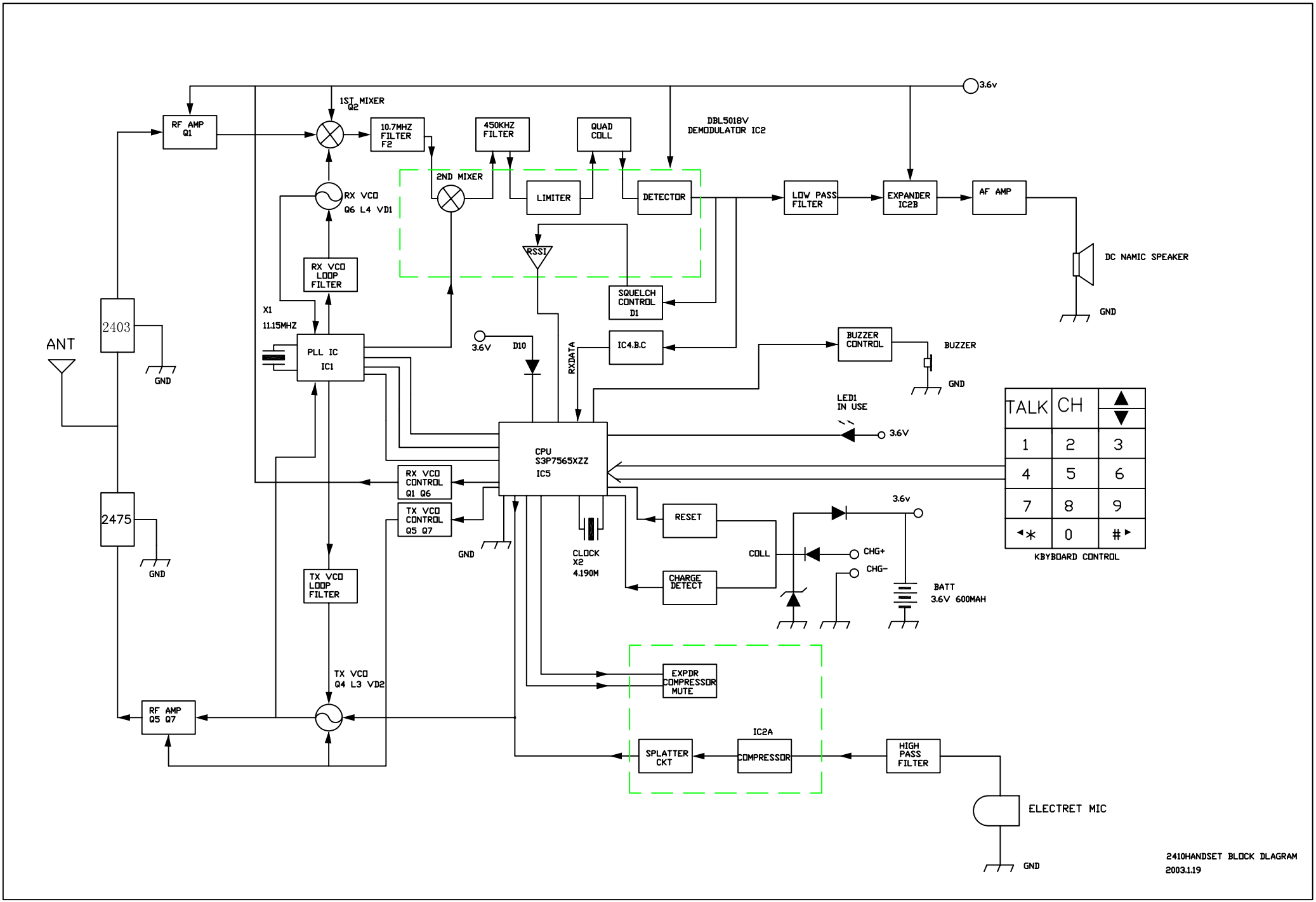
3.6v
1ST MIXER
Q2
RF AMP
Q1
10.7MHZ
FILTER
F2
450KHZ
FILTER
QUAD
COLL
DBL5018V
DEMODULATOR IC2
2ND MIXER
LIMITER
DETECTOR
LOW PASS
FILTER
EXPANDER
IC2B
AF AMP
RX VCO
Q6 L4 VD1
RSSI
DC NAMIC SPEAKER
GND
RX VCO
LOOP
FILTER
SQUELCH
CONTROL
D1
X1
11.15MHZ
2403
ANT
PLL IC
IC1
3.6V
D10
RXDATA
IC4.B.C
BUZZER
CONTROL
BUZZER
GND
LED1
IN USE
3.6V
TALK
CH
1
2
3
4
5
6
7
8
9
0
KBYBOARD CONTROL
CPU
S3P7565XZZ
IC5
RX VCO
CONTROL
Q1 Q6
TX VCO
CONTROL
Q5 Q7
2475
GND
CLOCK
X2
4.190M
RESET
COLL
CHARGE
DETECT
3.6v
CHG+
CHG-
BATT
3.6V 600MAH
TX VCO
LOOP
FILTER
TX VCO
Q4 L3 VD2
EXPDR
COMPRESSOR
MUTE
RF AMP
Q5 Q7
IC2A
SPLATTER
CKT
COMPRESSOR
HIGH
PASS
FILTER
ELECTRET MIC
GND
2410HANDSET BLOCK DLAGRAM
2003.1.19