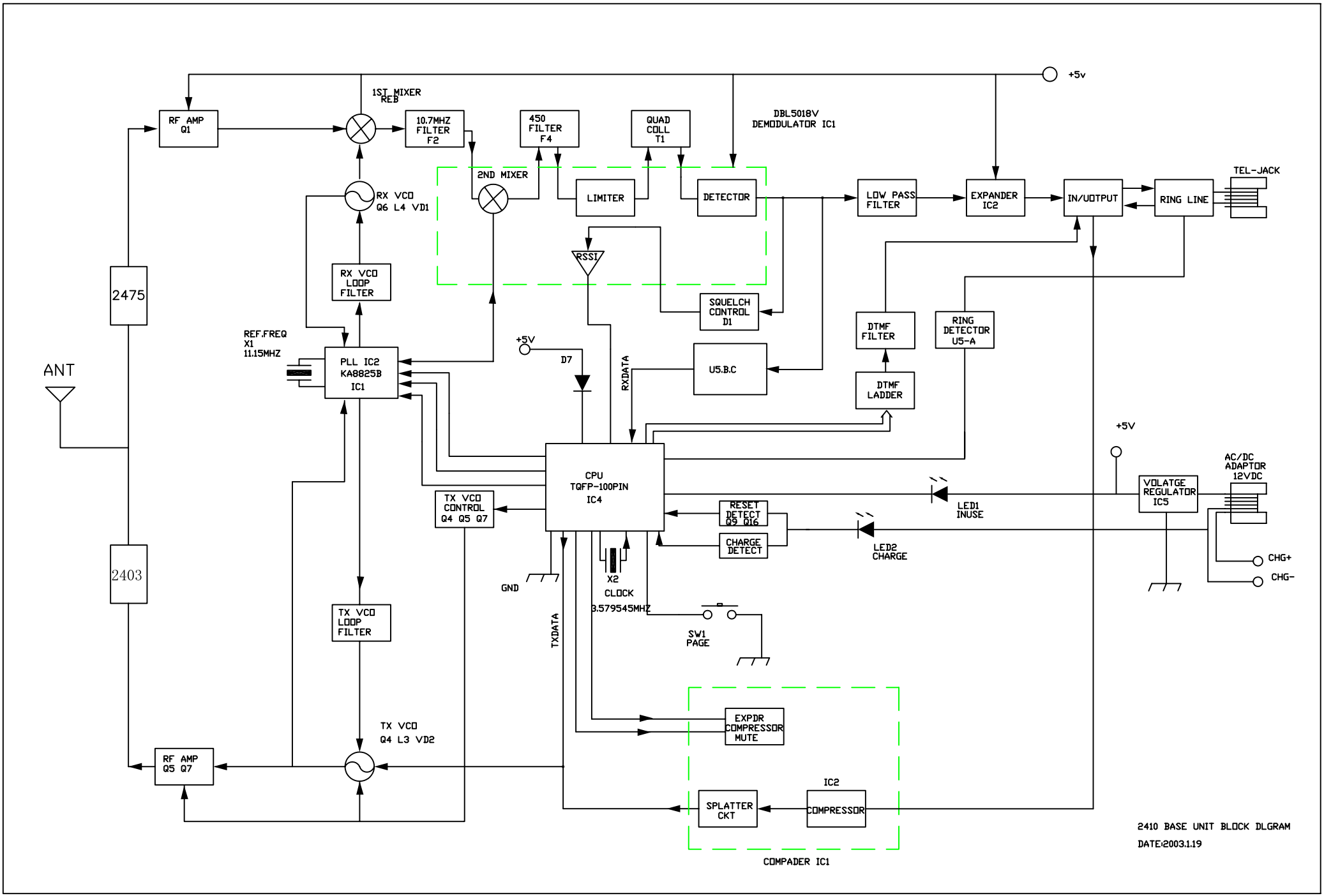
+5v
1ST MIXER
REB
RF AMP
Q1
10.7MHZ
FILTER
F2
450
FILTER
F4
QUAD
COLL
T1
DBL5018V
DEMODULATOR IC1
2ND MIXER
LIMITER
DETECTOR
LOW PASS
FILTER
EXPANDER
IC2
IN/UOTPUT
RING LINE
TEL-JACK
RX VCO
Q6 L4 VD1
RSSI
RX VCO
LOOP
FILTER
SQUELCH
CONTROL
D1
2475
REF.FREQ
X1
11.15MHZ
PLL IC2
KA8825B
IC1
+5V
D7
RXDATA
U5.B.C
DTMF
FILTER
RING
DETECTOR
U5-A
DTMF
LADDER
ANT
+5V
CPU
TQFP-100PIN
IC4
AC/DC
ADAPTOR
12VDC
VOLATGE
REGULATOR
IC5
LED1
INUSE
TX VCO
CONTROL
Q4 Q5 Q7
RESET
DETECT
Q5 Q16
CHARGE
DETECT
LED2
CHARGE
CHG+
CHG-
2403
GND
X2
CLOCK
3.579545MHZ
TXDATA
SW1
PAGE
TX VCO
LOOP
FILTER
EXPDR
COMPRESSOR
MUTE
TX VCO
Q4 L3 VD2
RF AMP
Q5 Q7
IC2
SPLATTER
CKT
COMPRESSOR
COMPADER IC1
2410 BASE UNIT BLOCK DLGRAM
DATE:2003.1.19