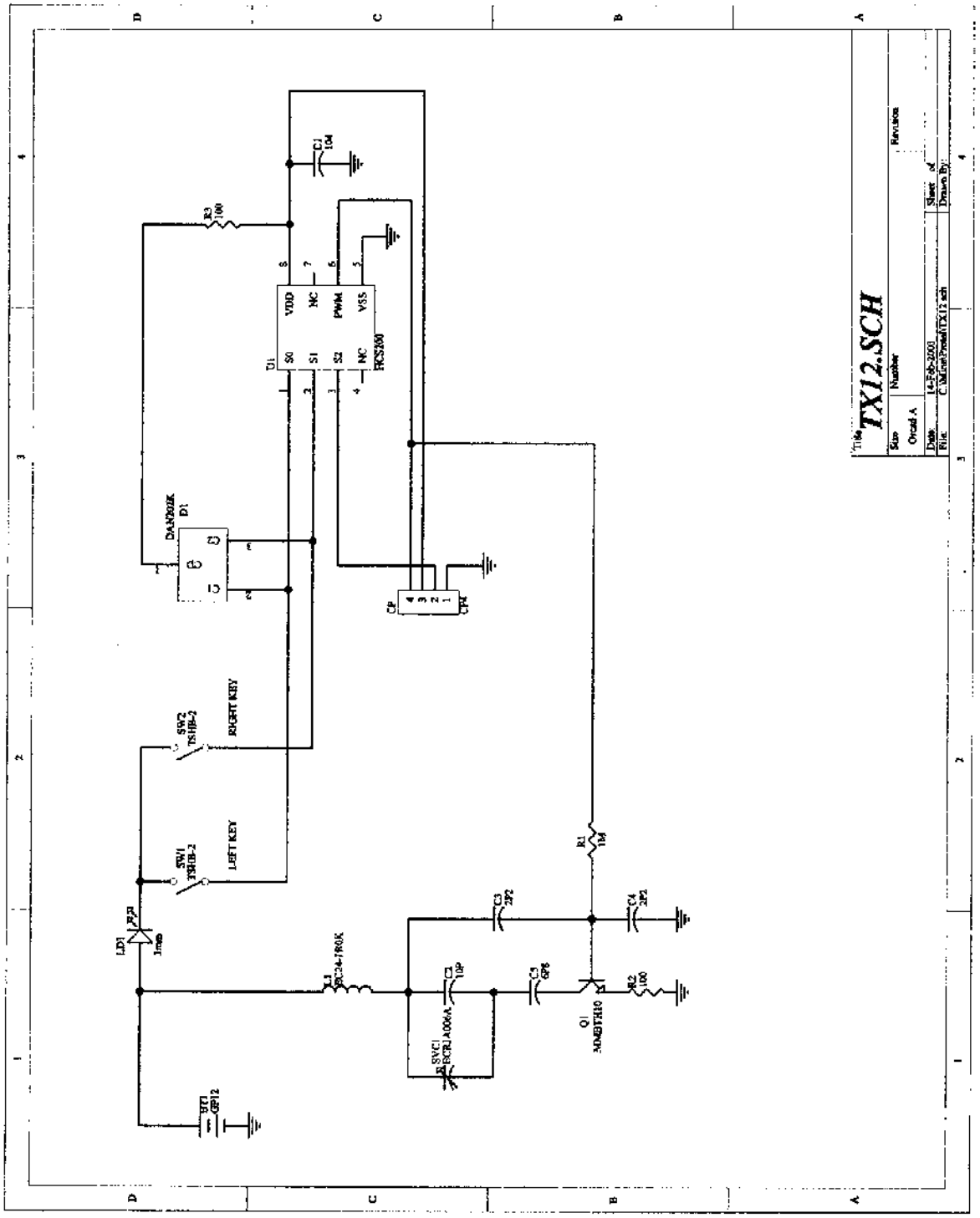Schematics Diagram