## Raymarine Limited

## 10kW Open Array Radar

FCC ID: PJ5MTX9-S3

Schematics

### Index


| | | | |
|---|---|---|---|
| Scanner Interconnect | 4357-033 | Sht. 1 | |
| Modulator/PSU | 4357-024 | Sht. 1 | Modulator/PSU (Top Level) |
| | | Sht. 2 | Power I/P Filter |
| | | Sht. 3 | Ship's Heading Interface |
| | | Sht. 4 | Stepper Motor (not fitted) |
| | | Sht. 5 | 3 Phase DC Brushless Motor Drive |
| | | Sht. 6 | Auxiliary PSU |
| | | Sht. 7 | Modulator |
| | | Sht. 8 | Main PSU |
| Low Noise Converter (LNC) | 4346-028 | Sht. 1 | |
| IF Receiver | 4437-004 | Sht. 1 | IF Receiver (Top Level) |
| | | Sht. 2 | IF Strips |
| | | Sht. 3 | IF Log Det/Video |
| | | Sht. 4 | Scanner Micro |
| | | Sht. 5 | Control Interface |
| | | Sht. 6 | STC Generator |



Raymarine Limited. Registered in England. Company No. 04578449
Registered Office: Anchorage Park, PO3 5TD

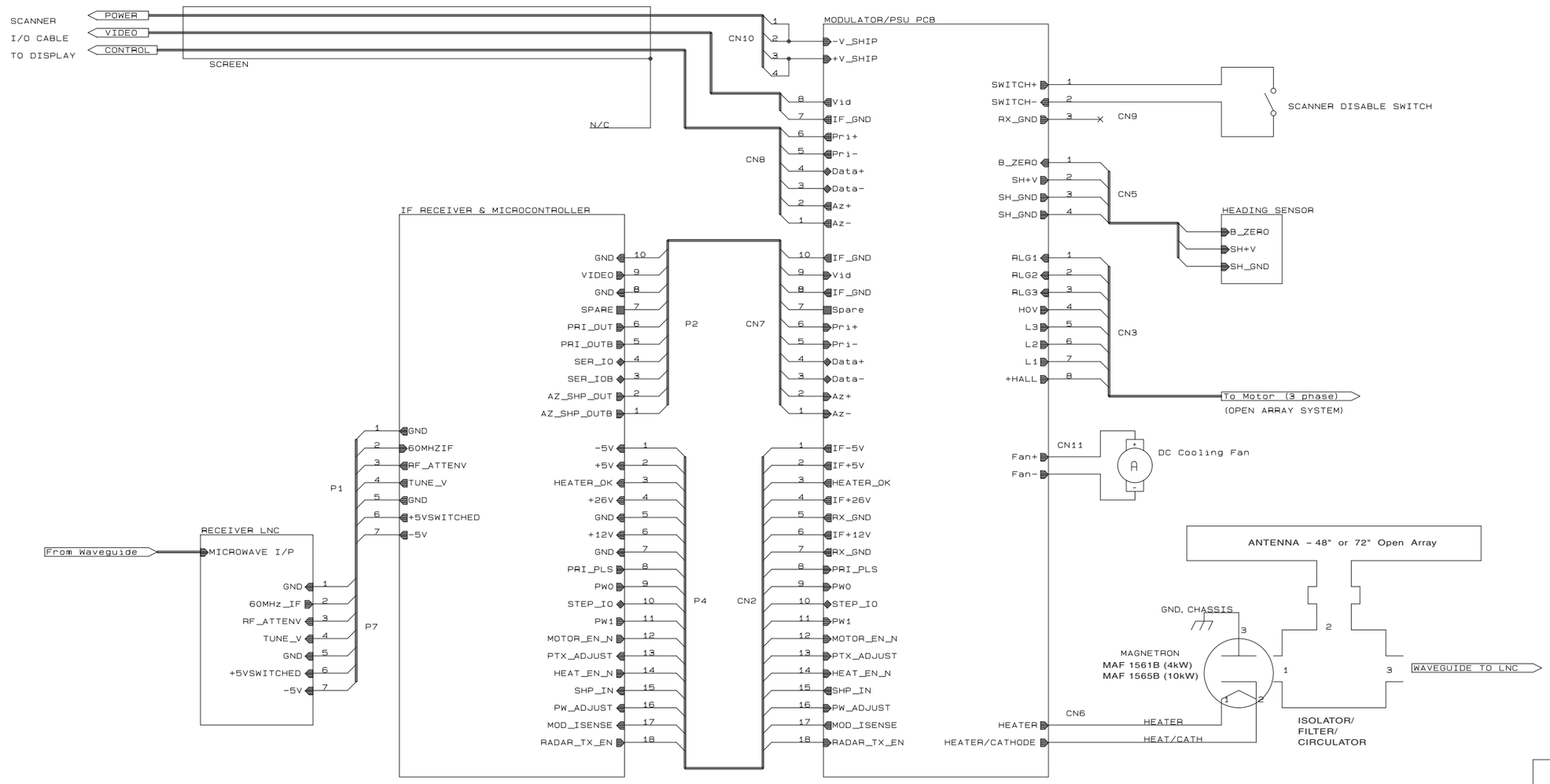


TOP-LEVEL OPEN ARRAY SCANNER INTERCONNECT

| | | |
|---|---|---|
| C | Scanner compliance | 1-10-02 |
| B | Update for 10kW Open Array | 8-12-99 |
| A | Original Issue | 12-5-99 |
| ISS | Description of Change | Date |

Raytheon Marine Europe
Anchorage Park
Portsmouth
Hants. PO3 5TD England

Title
Pathfinder Open Array Scanner Interconect

| Size | Document Number | REV |
|---|---|---|
| A2 | 4357-033 | B |

Date: December 8, 1999 Sheet 1 of 1

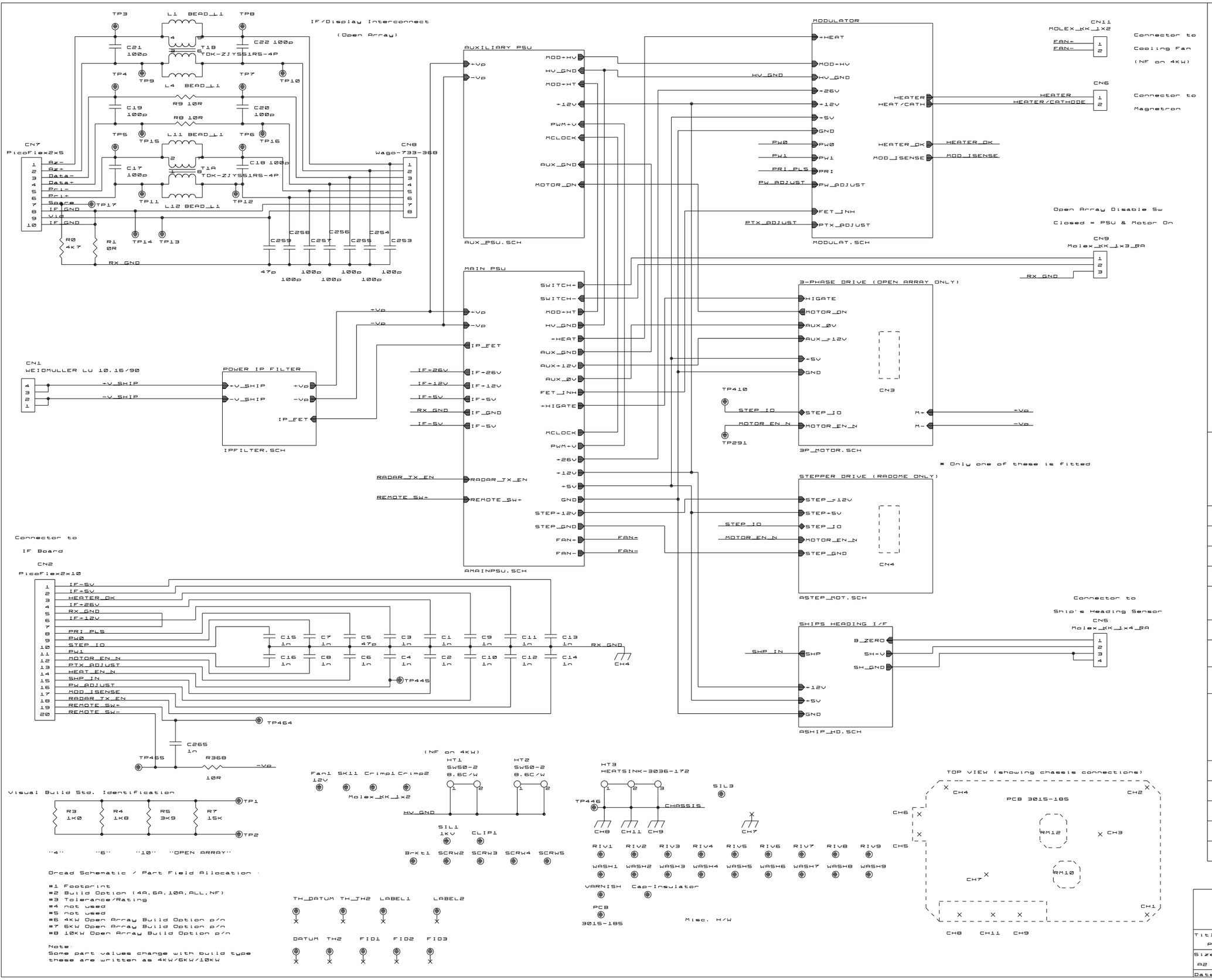


| ISS | Description of change | Date |
|---|---|---|
| O | Add remote sw and updates<br>Relates to MOD M-02-0139<br>Issue E PCB<br><br>Iss. M and N of schematic<br>Mods M-00-0001<br>M-01-0091<br>M-01-0128<br>Incorporated | 11-12-02 |
| L | ECN 4357-017/016 | 12-04-00 |
| K | Add D70, D71 | 28-01-00 |
| J | Minor Corrections | 18-01-00 |
| I | Minor Corrections | 15-11-99 |
| H | Many updates for<br>Issue D PCB<br>and for 10KW build | 15-10-99 |
| G | ECN 4357-013/016/017-013 | 13-5-99 |
| F | ECN 4357-013-012<br>ECN 4357-013/016/017-011 | 27-4-99 |
| E | ECN 4357-013-010<br>ECN 4357-013/016/017-009 | 24-3-99 |
| D | Add C205<br>ECN 4357-013/016/017-008<br>ECN 4357-013/016/017-007<br>ECN 4357-013-006<br>ECN 4357-013/016/017-004<br>ECN 4357-013/016/017-003<br>ECN 4357-013/016/017-002<br>ECN 4357-013-001 | 24-2-99 |
| C | Minor BOM corrections | 25-1-99 |
| B10 | As for PCB Iss C | 13-1-99 |
| A12 | Intial PCB Rev. B | 07-9-98 |
| Ax | Initial Draft's | 01-9-98 |

Raymarine Ltd
Anchorage Park
Portsmouth
England

Title
Pathfinder Radar : Modulator/PSU (MkII)

| Size | Document Number | REV |
|---|---|---|
| A2 | 4357-024 | O |

Date: January 7, 2003 Sheet 1 of 8

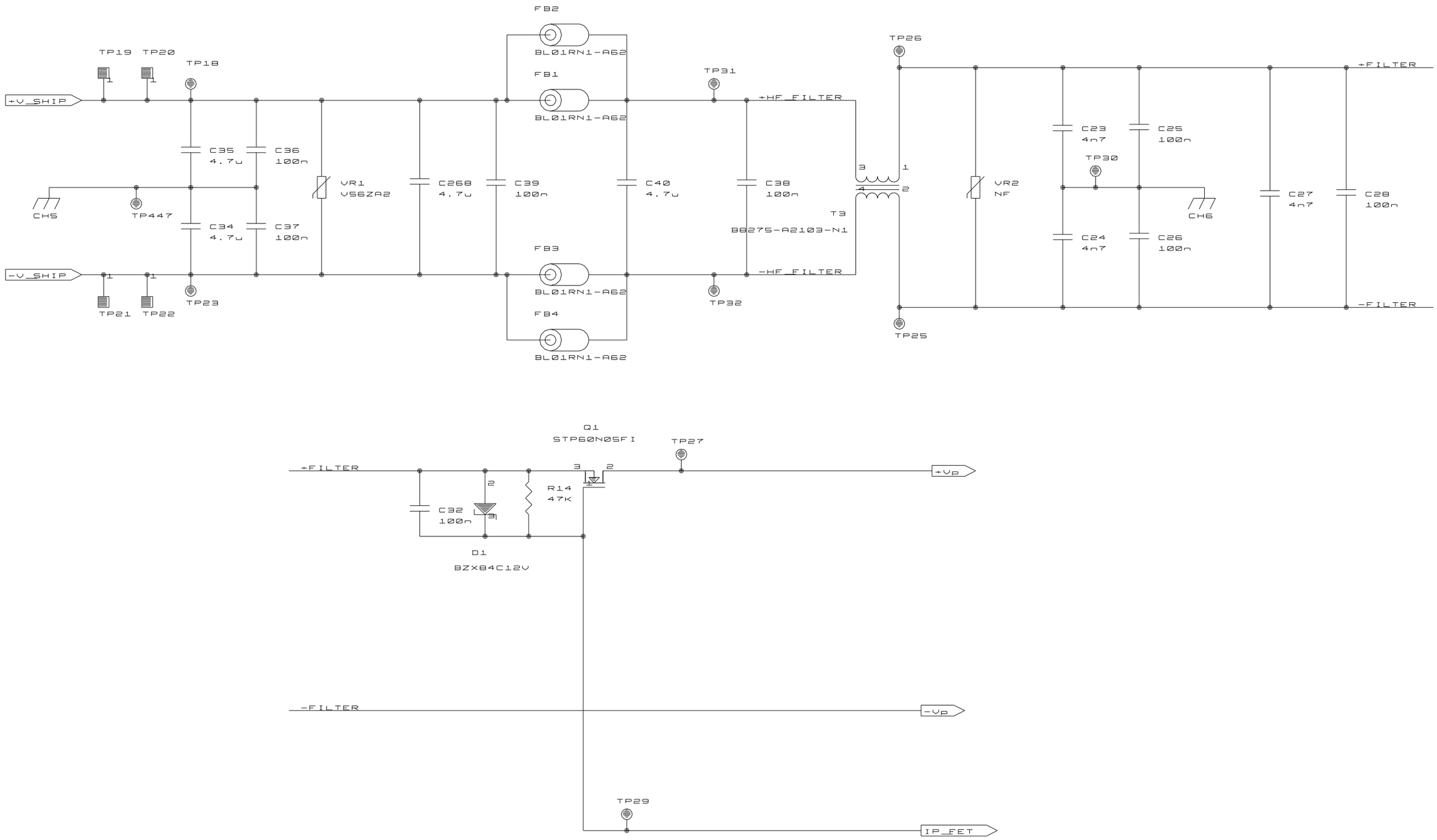


(c) Raymarine Ltd.

Anchorage Park
Portsmouth
England

Title
POWER I/P FILTER

| Size | Document Number | REV |
|---|---|---|
| A3 | 4357-024 | 0 |

Date: January 7. 2003 Sheet 2 of 8

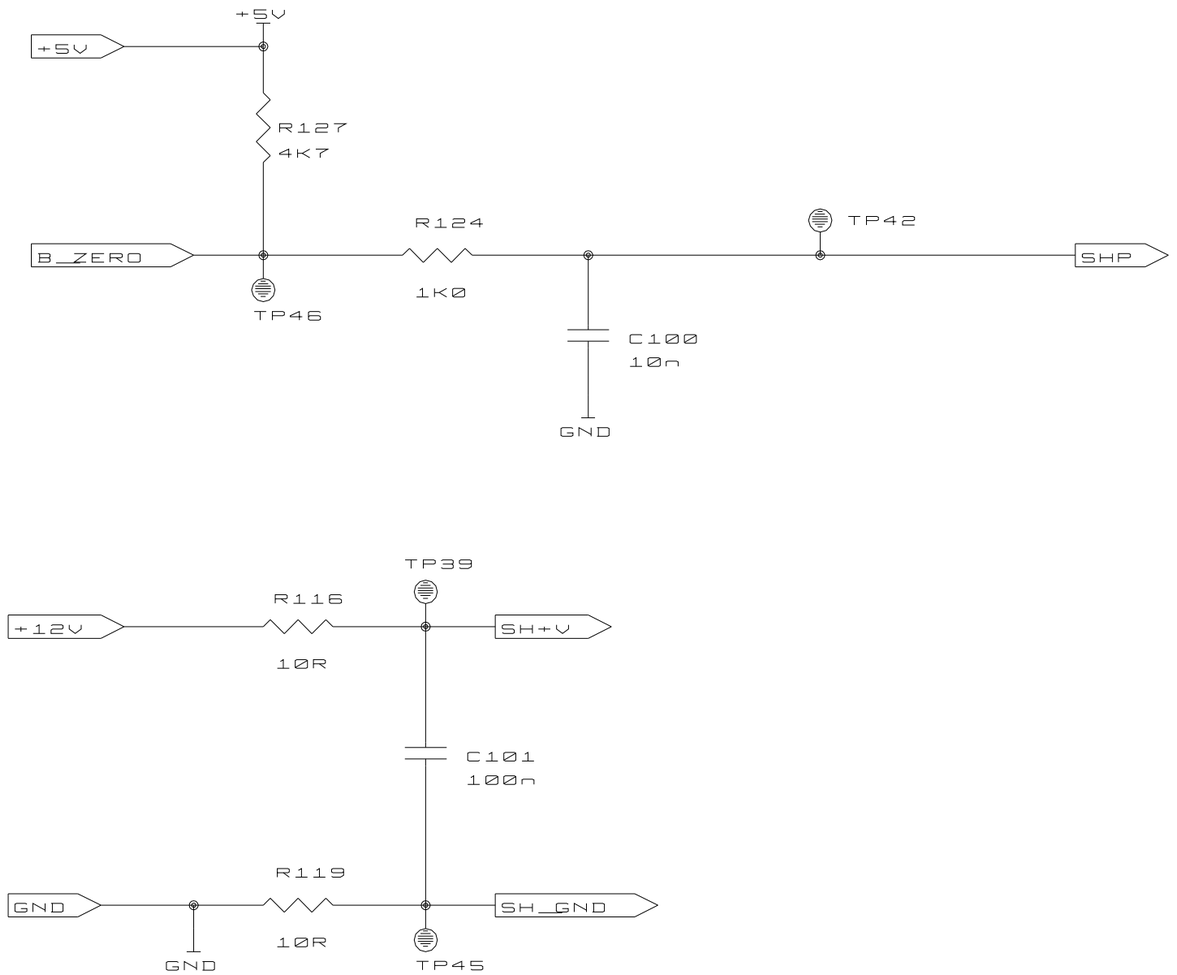


(C) RAYMARINE LTD.

ANCHORAGE PARK
PORTMOUTH
ENGLAND

Title
Ships Heading Interface (Open Array)

| Size | Document Number | REV |
|---|---|---|
| A4 | 4357-024 | 0 |

Date: January 7. 2003 | Sheet 3 of 8

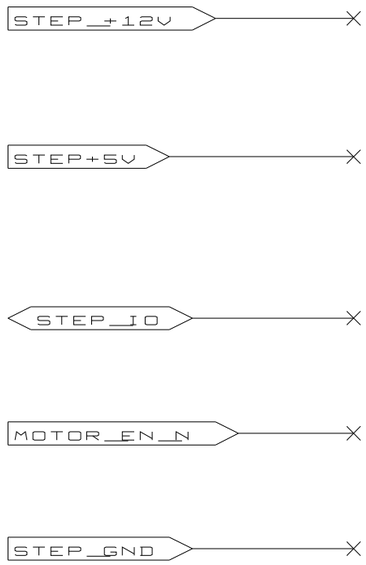


(C) RAYMARINE LTD.

ANCHORAGE PARK
PORTMOUTH
ENGLAND

Title
Stepper Motor (Not Fit - Radome Only)

| Size | Document Number | REV |
|---|---|---|
| A4 | 4357-024 | 0 |

Date: January 7. 2003 | Sheet 4 of 8

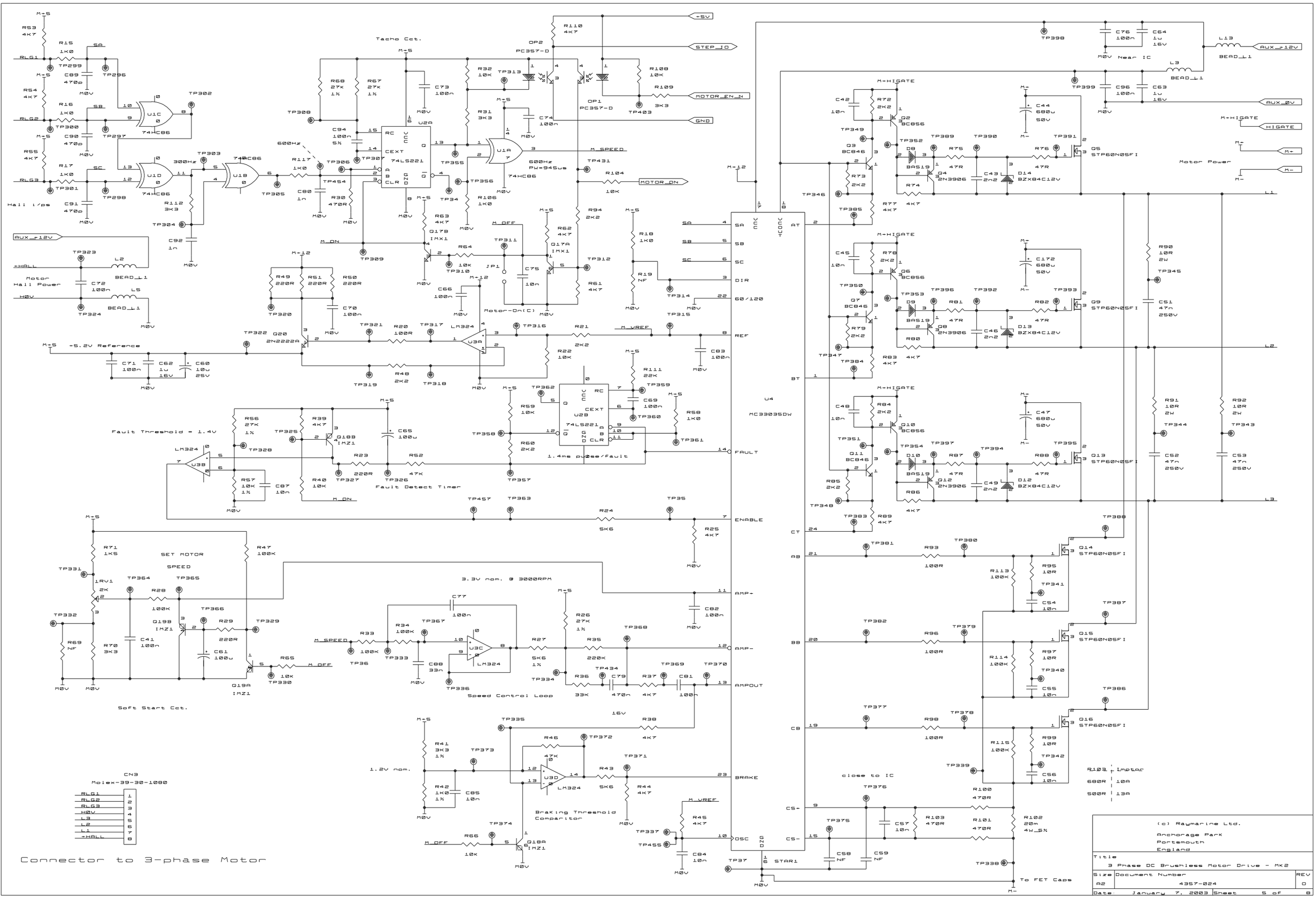
Tacho Cct.
Hall i/ps
Motor Hall Power
+5.2V Reference
Fault Threshold = 1.4V
Fault Detect Timer
1.4ms pulse/fault
SET MOTOR SPEED
3.3V nom. @ 3000RPM
Speed Control Loop
Soft Start Cct.
1.2V nom.
Braking Threshold Comparitor
Motor Power
Near IC
close to IC
To FET Caps
CN3
Molex-39-30-1080
Connector to 3-phase Motor
U4
MC33035DW
(c) Raymarine Ltd.
Anchorage Park
Portsmouth
England
Title
3 Phase DC Brushless Motor Drive - MK2
Size A2
Document Number 4357-024
REV 0
Date January 7, 2003
Sheet 5 of 8

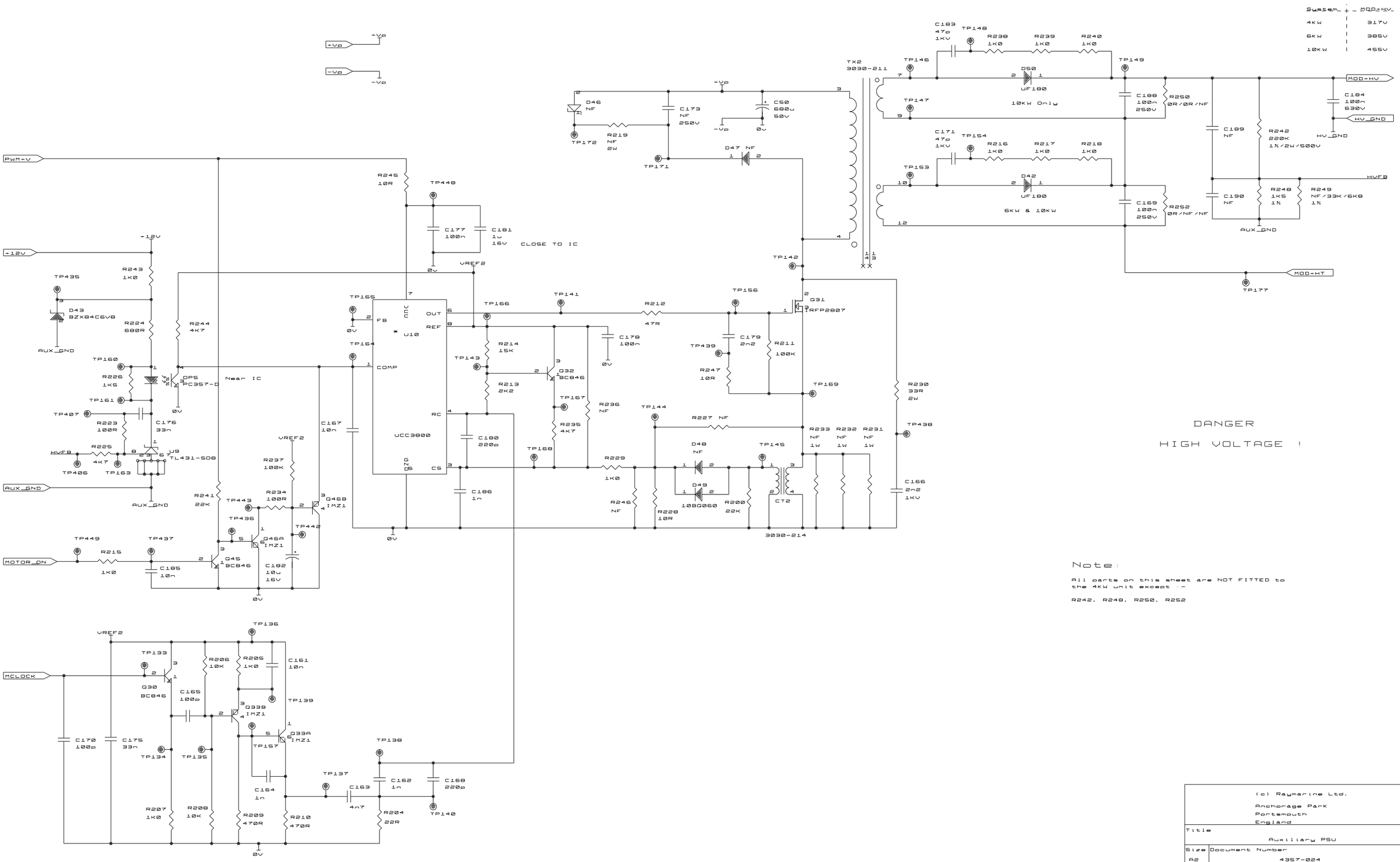


DANGER

HIGH VOLTAGE !

Note:

All parts on this sheet are NOT FITTED to the 4KW unit except :-

R242, R248, R250, R252

(c) Raymarine Ltd.

Anchorage Park
Portsmouth
England

| | | |
|---|---|---|
| Title | Auxiliary PSU | |
| Size A2 | Document Number 4357-024 | REV 0 |
| Date: January 7, 2003 | Sheet 6 of 8 | |

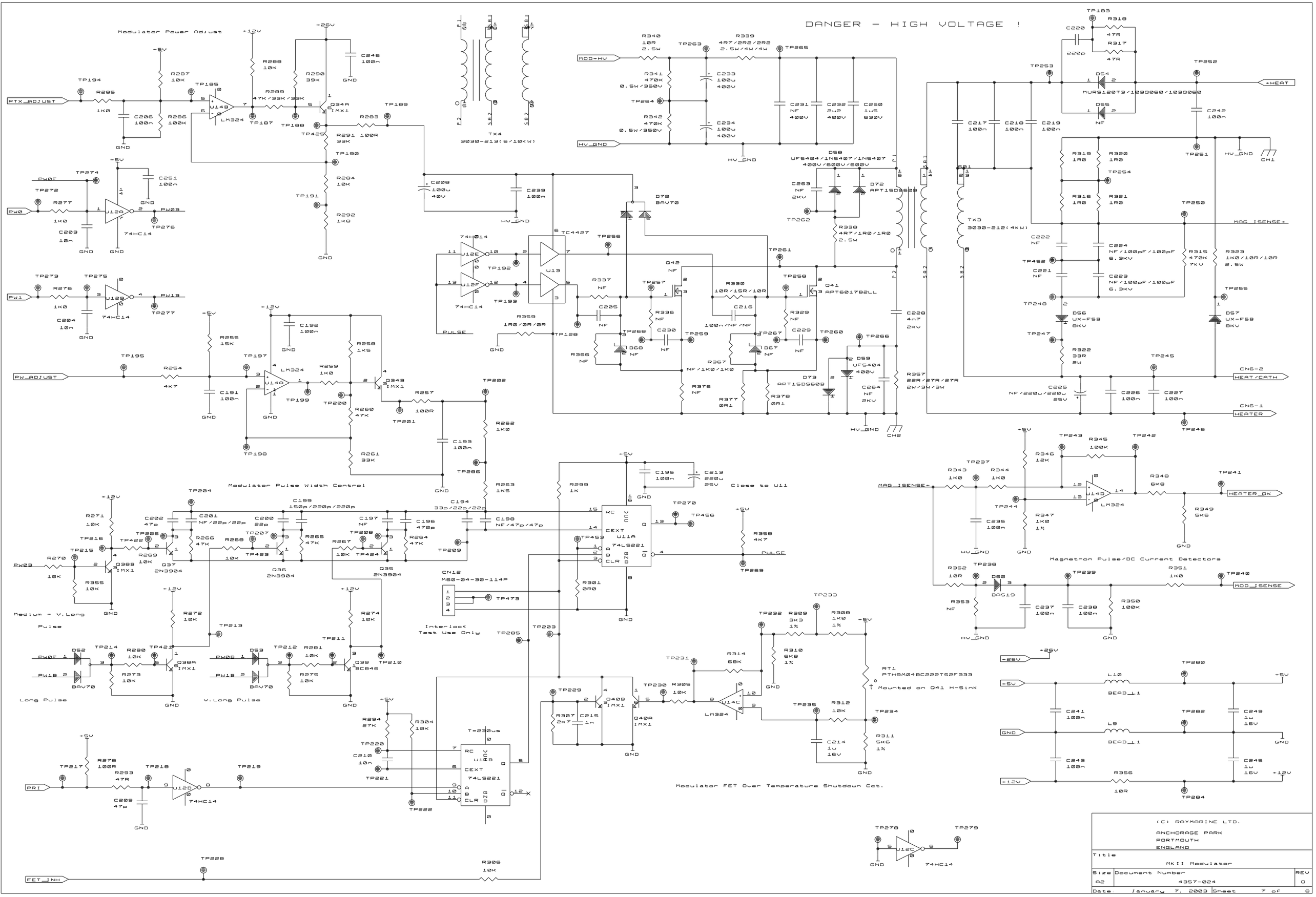


(C) RAYMARINE LTD.
ANCHORAGE PARK
PORTMOUTH
ENGLAND

| Title | | |
|---|---|---|
| MkII Modulator | | |
| Size A2 | Document Number 4357-024 | REV D |
| Date: January 7, 2003 | Sheet 7 of 8 | |

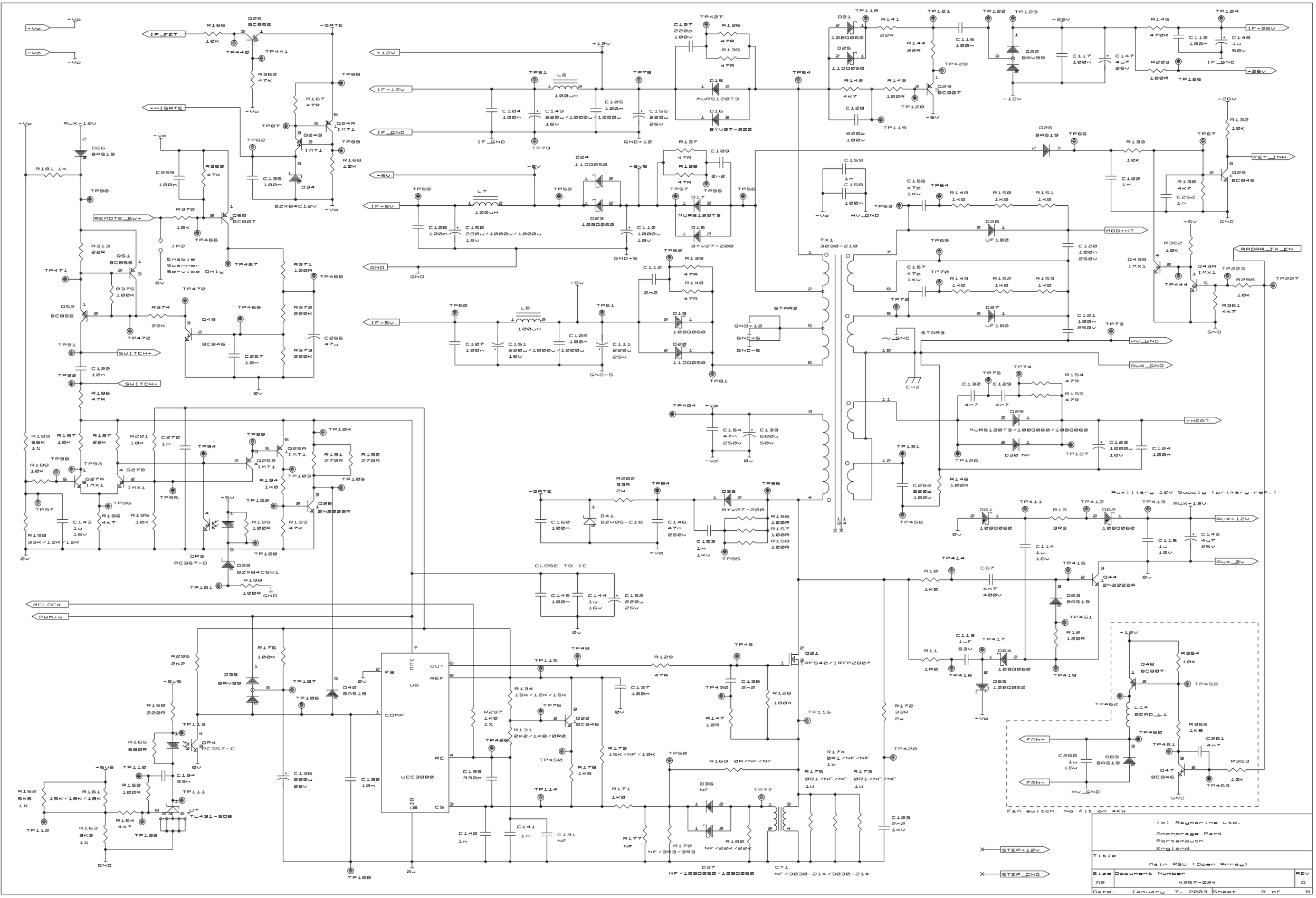
IP_FET
+HIGATE
REMOTE_SW+
Enable Scanner Service Only
SWITCH+
SWITCH-
MCLOCK
PWM+V
IF+12V
IF_GND
IF+5V
IF-5V
GND
FET_INH
MOD+HT
RADAR_TX_EN
HV_GND
AUX_GND
+HEAT
Auxiliary 12V Supply (primary ref.)
AUX+12V
AUX_0V
CLOSE TO IC
FAN+
FAN-
Fan switch: No fit on 4KW
STEP+12V
STEP_GND
UCC3800
TX1 3030-210
CT1 NF/3030-214/3030-214
(c) Raymarine Ltd.
Anchorage Park
Portsmouth
England
Title
Main PSU (Open Array)
Size A2
Document Number 4357-024
REV 0
Date January 7, 2003
Sheet 8 of 8

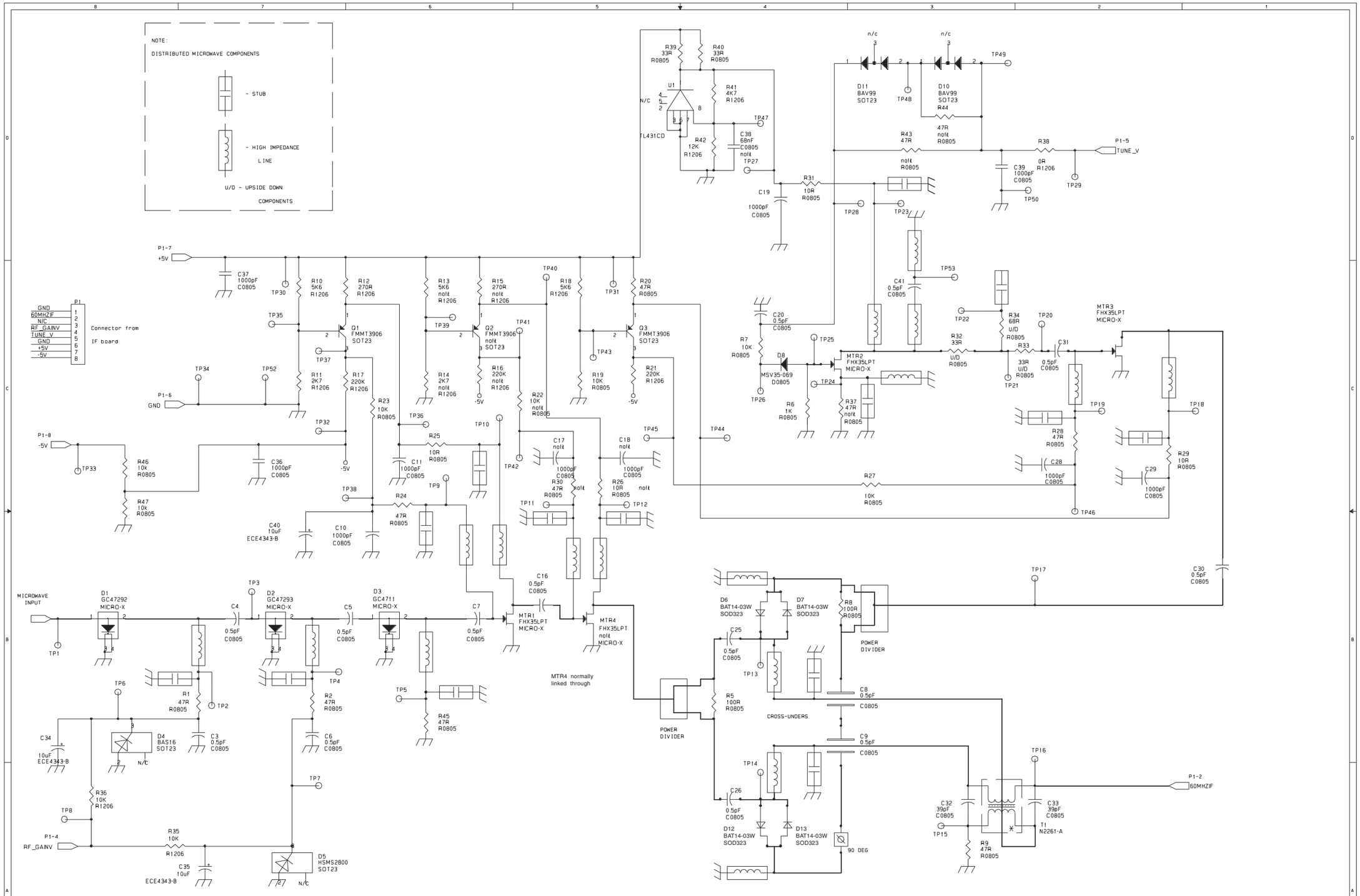
NOTE:
DISTRIBUTED MICROWAVE COMPONENTS
- STUB
- HIGH IMPEDANCE LINE
U/D - UPSIDE DOWN COMPONENTS
P1
GND
60MHZIF
N/C
RF_GAINV
TUNE_V
GND
+5V
-5V
Connector from IF board
P1-7
+5V
P1-6
GND
P1-8
-5V
P1-5
TUNE_V
P1-2
60MHZIF
P1-4
RF_GAINV
MICROWAVE INPUT
D1 GC47292 MICRO-X
D2 GC47293 MICRO-X
D3 GC4711 MICRO-X
Q1 FMMT3906 SOT23
Q2 FMMT3906 not SOT23
Q3 FMMT3906 SOT23
U1 TL431CD
D11 BAV99 SOT23
D10 BAV99 SOT23
D8 MSV35-069 D0805
MTR1 FHX35LPT MICRO-X
MTR2 FHX35LPT MICRO-X
MTR3 FHX35LPT MICRO-X
MTR4 FHX35LPT not MICRO-X
MTR4 normally linked through
D4 BAS16 SOT23
D5 HSMS2800 SOT23
D6 BAT14-03W SOD323
D7 BAT14-03W SOD323
D12 BAT14-03W SOD323
D13 BAT14-03W SOD323
90 DEG
POWER DIVIDER
CROSS-UNDERS
T1 N2261-A
LOW NOISE CONVERTER / LIMITER
Revision M schematic reflects Issue G board
Raytheon Marine Europe
ANCHORAGE PARK, PORTSMOUTH
HAMPSHIRE PO3 5TD
Title
Low Noise Converter (LNC)
Size C
Document Number 4346-028
Rev N
Date: Wednesday, October 20, 1999
Sheet 1 of 1

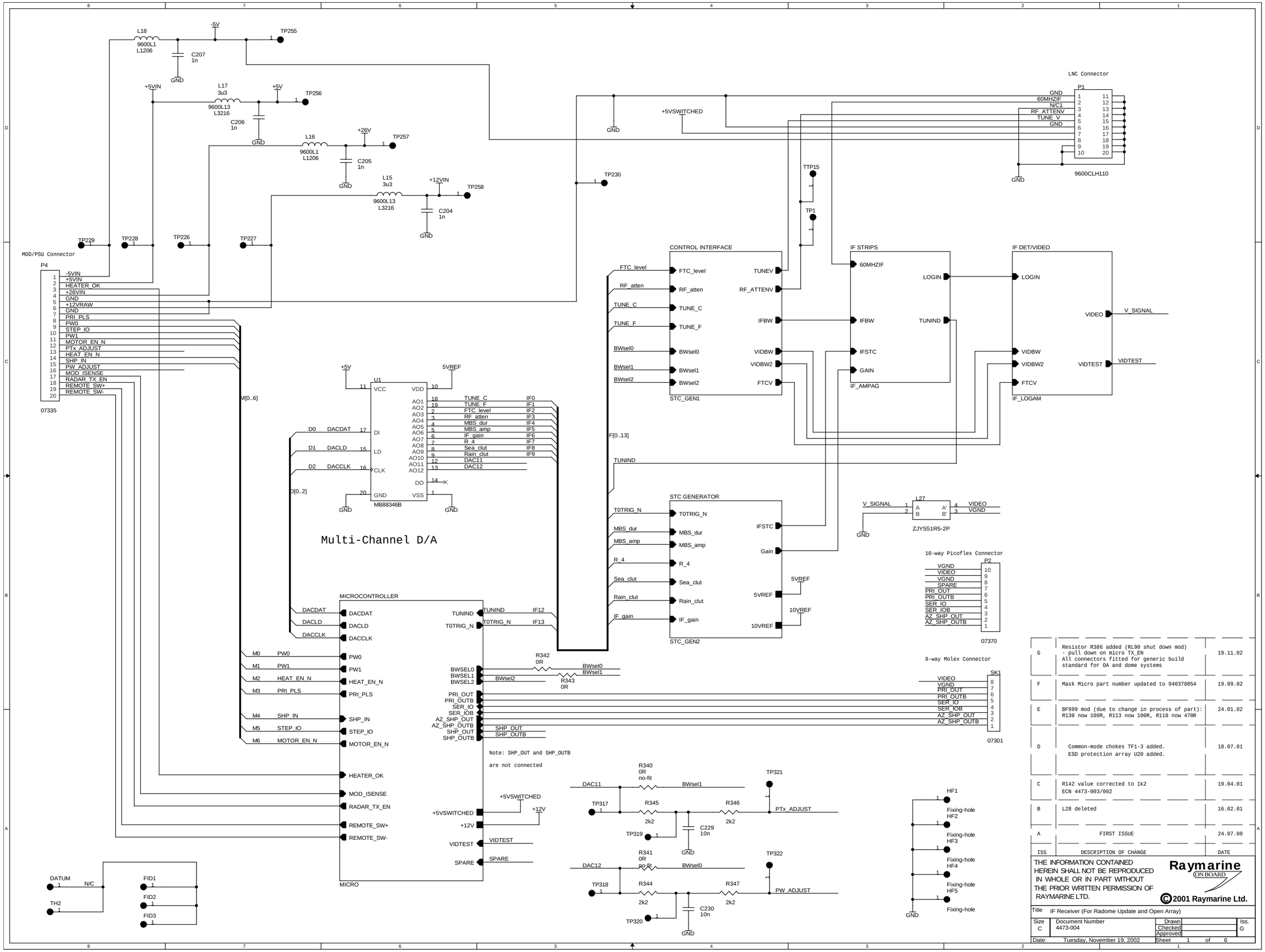


| ISS | DESCRIPTION OF CHANGE | DATE |
|---|---|---|
| G | Resistor R386 added (RL90 shut down mod)<br>- pull down on micro TX_EN<br>All connectors fitted for generic build standard for OA and dome systems | 19.11.02 |
| F | Mask Micro part number updated to 940378054 | 19.09.02 |
| E | BF999 mod (due to change in process of part):<br>R130 now 100R, R113 now 100R, R118 now 470R | 24.01.02 |
| D | Common-mode chokes TF1-3 added.<br>ESD protection array U20 added. | 18.07.01 |
| C | R142 value corrected to 1k2<br>ECN 4473-003/002 | 19.04.01 |
| B | L28 deleted | 16.02.01 |
| A | FIRST ISSUE | 24.07.00 |

THE INFORMATION CONTAINED HEREIN SHALL NOT BE REPRODUCED IN WHOLE OR IN PART WITHOUT THE PRIOR WRITTEN PERMISSION OF RAYMARINE LTD.

Raymarine ON BOARD

©2001 Raymarine Ltd.

Title: IF Receiver (For Radome Update and Open Array)

Size: C | Document Number: 4473-004 | Drawn | Checked | Approved | Iss. G

Date: Tuesday, November 19, 2002 | Sheet 1 of 6

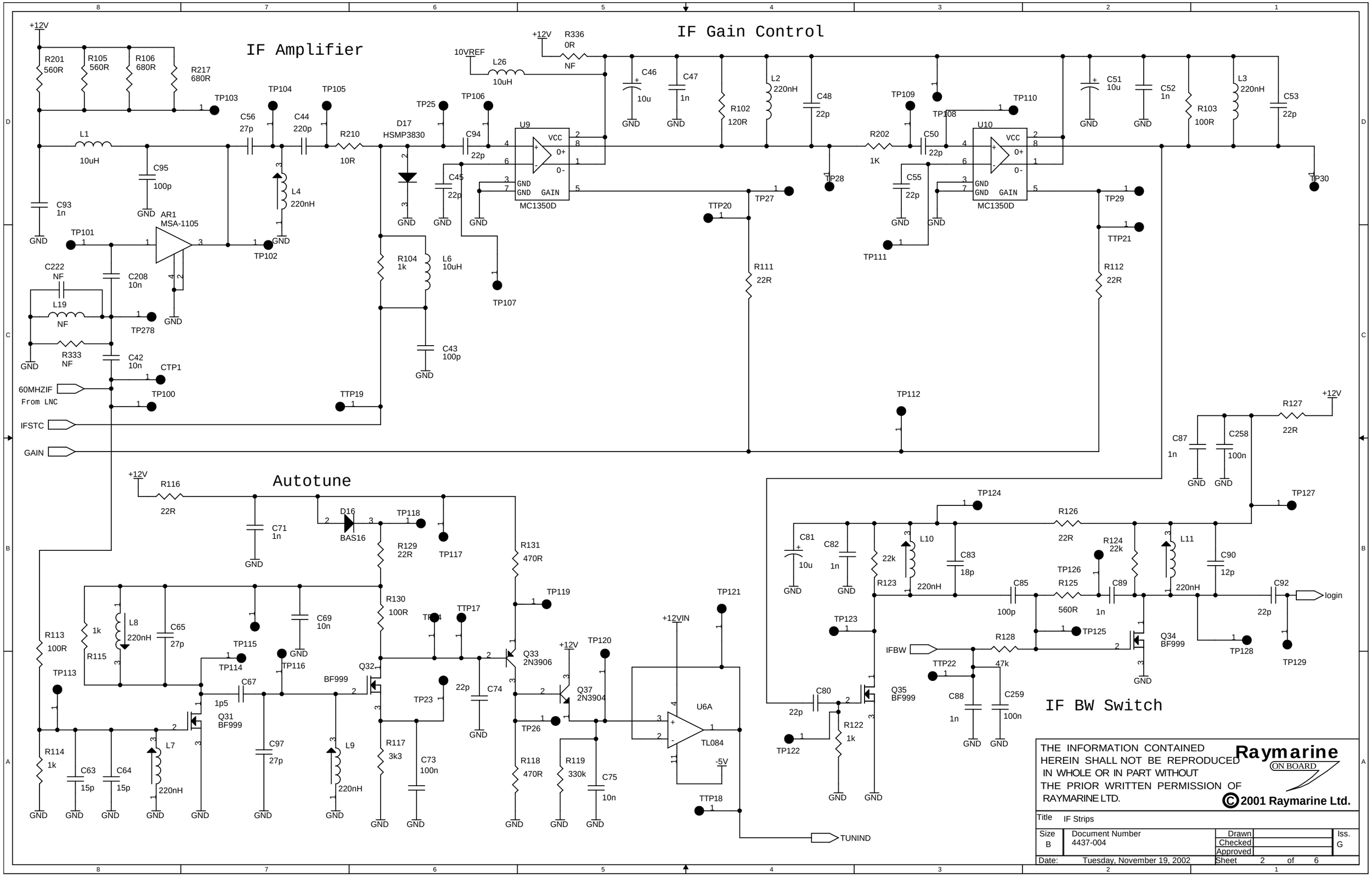
IF Amplifier
IF Gain Control
Autotune
IF BW Switch
+12V
R201 560R
R105 560R
R106 680R
R217 680R
TP103
TP104
TP105
C56 27p
C44 220p
R210 10R
D17 HSMP3830
TP25
TP106
C94 22p
U9
MC1350D
VCC
0+
0-
GND
GAIN
10VREF
L26 10uH
R336 0R
NF
C46 10u
C47 1n
R102 120R
L2 220nH
C48 22p
TP109
TP108
TP110
R202 1K
C50 22p
U10
C51 10u
C52 1n
R103 100R
L3 220nH
C53 22p
TP30
L1 10uH
C95 100p
C93 1n
L4 220nH
AR1 MSA-1105
TP101
TP102
C45 22p
TP27
TTP20
TP28
C55 22p
TP111
TP29
TTP21
R104 1k
L6 10uH
TP107
R111 22R
R112 22R
C222 NF
L19 NF
C208 10n
TP278
R333 NF
C42 10n
CTP1
C43 100p
60MHZIF
From LNC
TP100
TTP19
TP112
IFSTC
GAIN
R127 22R
C87 1n
C258 100n
R116 22R
C71 1n
D16 BAS16
TP118
R129 22R
TP117
R131 470R
TP119
R130 100R
TP114
TTP17
C69 10n
TP115
TP116
R113 100R
R115 1k
L8 220nH
C65 27p
TP113
Q32 BF999
Q33 2N3906
TP120
Q37 2N3904
TP121
+12VIN
U6A
TL084
-5V
TTP18
TUNIND
C67 1p5
Q31 BF999
C97 27p
L9 220nH
TP23
22p
C74
TP26
R114 1k
C63 15p
C64 15p
L7 220nH
R117 3k3
C73 100n
R118 470R
R119 330k
C75 10n
TP124
R126 22R
R124 22k
C81 10u
C82 1n
R123 22k
L10 220nH
C83 18p
TP126
R125 560R
C89 1n
L11 220nH
C90 12p
C92 22p
login
TP127
TP128
TP129
TP123
C85 100p
IFBW
R128 47k
TP125
Q34 BF999
TTP22
C80 22p
Q35 BF999
C88 1n
C259 100n
TP122
R122 1k
THE INFORMATION CONTAINED HEREIN SHALL NOT BE REPRODUCED IN WHOLE OR IN PART WITHOUT THE PRIOR WRITTEN PERMISSION OF RAYMARINE LTD.
Raymarine
ON BOARD
© 2001 Raymarine Ltd.
Title IF Strips
Size B
Document Number 4437-004
Drawn
Checked
Approved
Iss. G
Date: Tuesday, November 19, 2002
Sheet 2 of 6

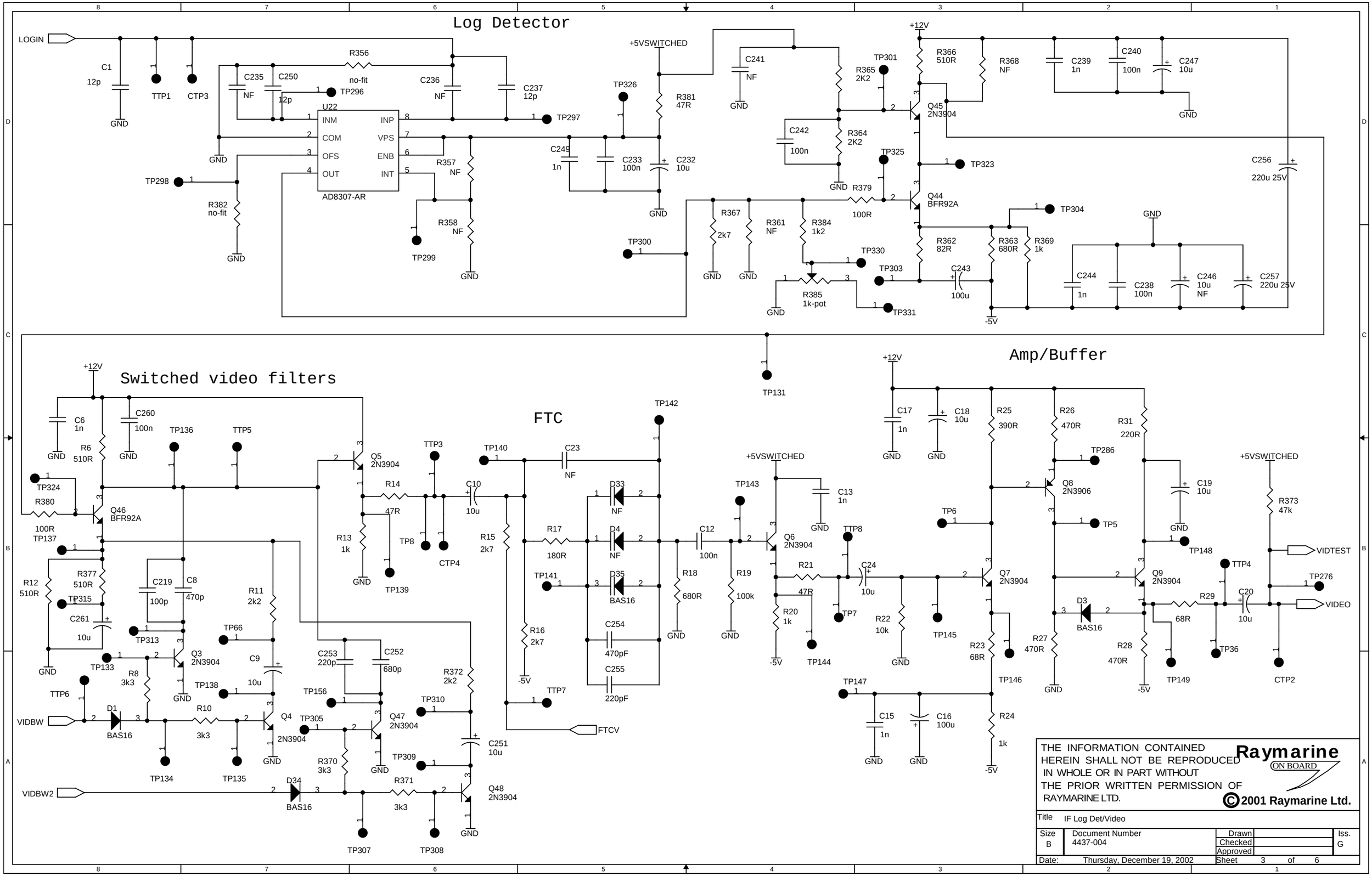


THE INFORMATION CONTAINED HEREIN SHALL NOT BE REPRODUCED IN WHOLE OR IN PART WITHOUT THE PRIOR WRITTEN PERMISSION OF RAYMARINE LTD.

Raymarine ON BOARD

© 2001 Raymarine Ltd.

| | | | |
|---|---|---|---|
| Title | IF Log Det/Video | | |
| Size B | Document Number 4437-004 | Drawn / Checked / Approved | Iss. G |
| Date: Thursday, December 19, 2002 | | Sheet 3 of 6 | |

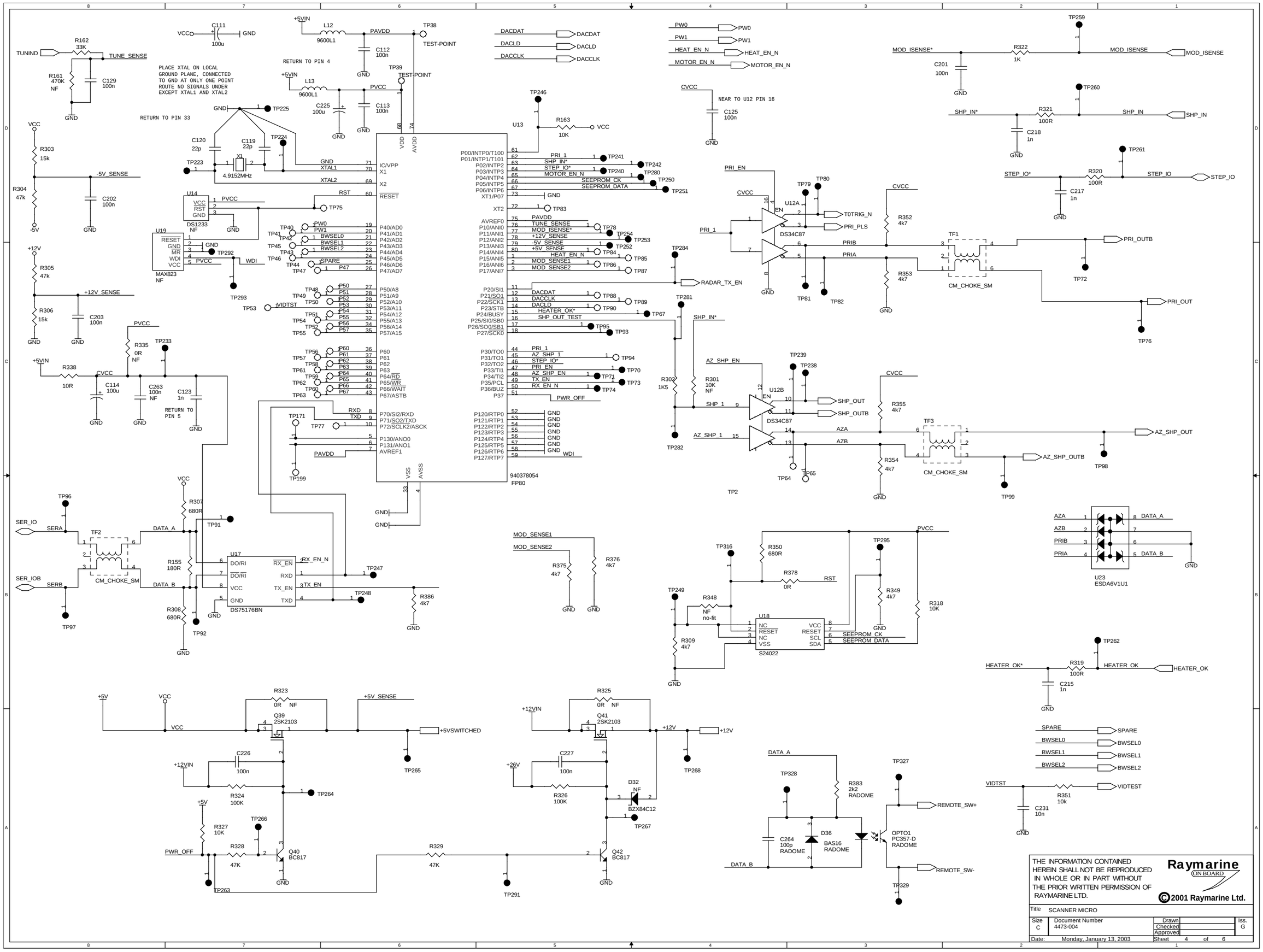
PLACE XTAL ON LOCAL GROUND PLANE, CONNECTED TO GND AT ONLY ONE POINT ROUTE NO SIGNALS UNDER EXCEPT XTAL1 AND XTAL2
RETURN TO PIN 4
RETURN TO PIN 33
RETURN TO PIN 5
NEAR TO U12 PIN 16
940378054
FP80
DS75176BN
DS34C87
S24022
ESDA6V1U1
CM_CHOKE_SM
MAX823
DS1233
4.9152MHz
2SK2103
BC817
BZX84C12
BAS16 RADOME
OPTO1 PC357-D RADOME
THE INFORMATION CONTAINED HEREIN SHALL NOT BE REPRODUCED IN WHOLE OR IN PART WITHOUT THE PRIOR WRITTEN PERMISSION OF RAYMARINE LTD.
Raymarine ON BOARD
©2001 Raymarine Ltd.
Title SCANNER MICRO
Size C
Document Number 4473-004
Drawn
Checked
Approved
Iss. G
Date: Monday, January 13, 2003
Sheet 4 of 6

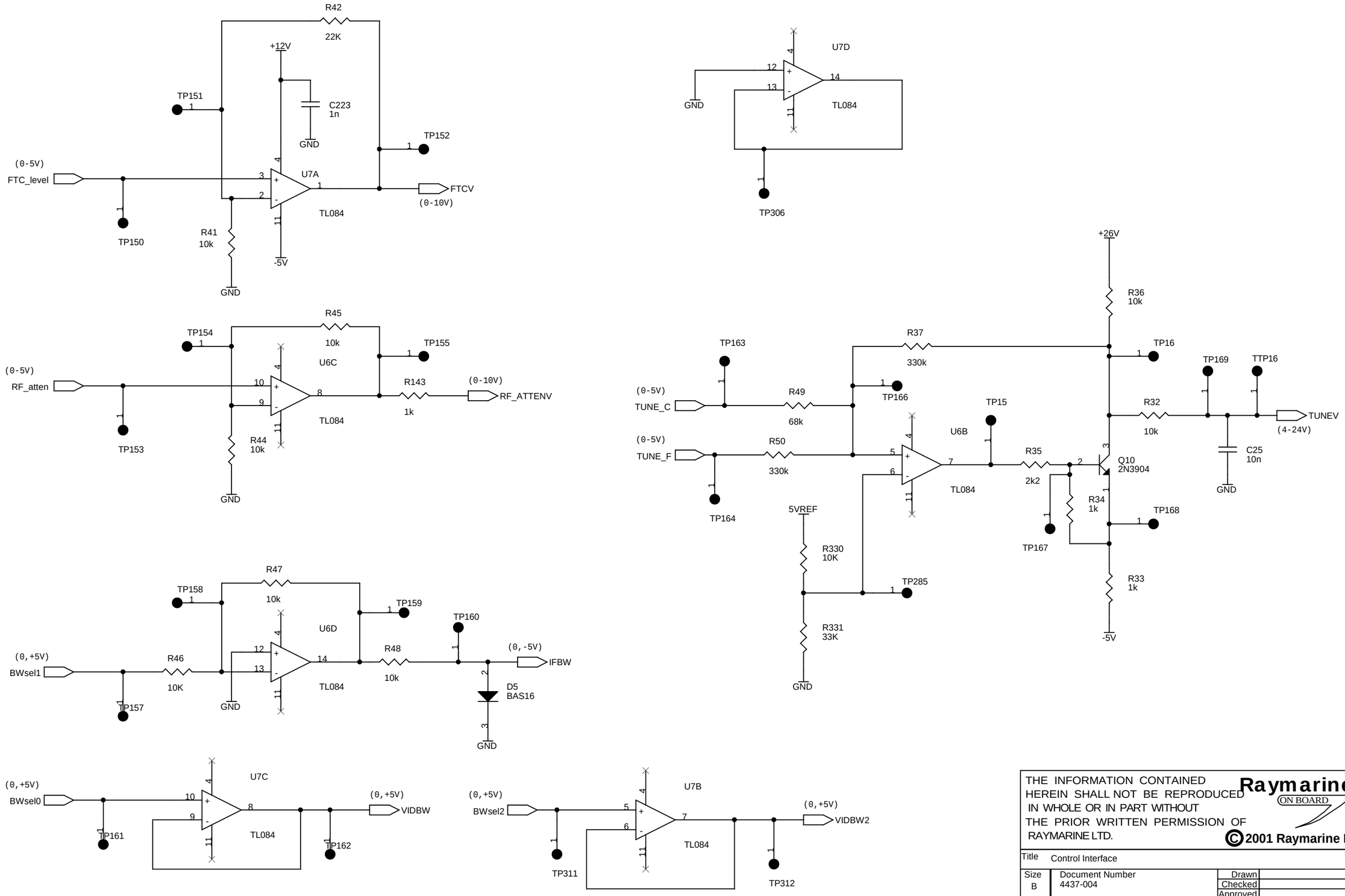


THE INFORMATION CONTAINED HEREIN SHALL NOT BE REPRODUCED IN WHOLE OR IN PART WITHOUT THE PRIOR WRITTEN PERMISSION OF RAYMARINE LTD.

Raymarine ON BOARD

© 2001 Raymarine Ltd.

| | | | |
|---|---|---|---|
| Title | Control Interface | | |
| Size B | Document Number 4437-004 | Drawn / Checked / Approved | Iss. G |
| Date: Tuesday, November 19, 2002 | | Sheet 5 of 6 | |

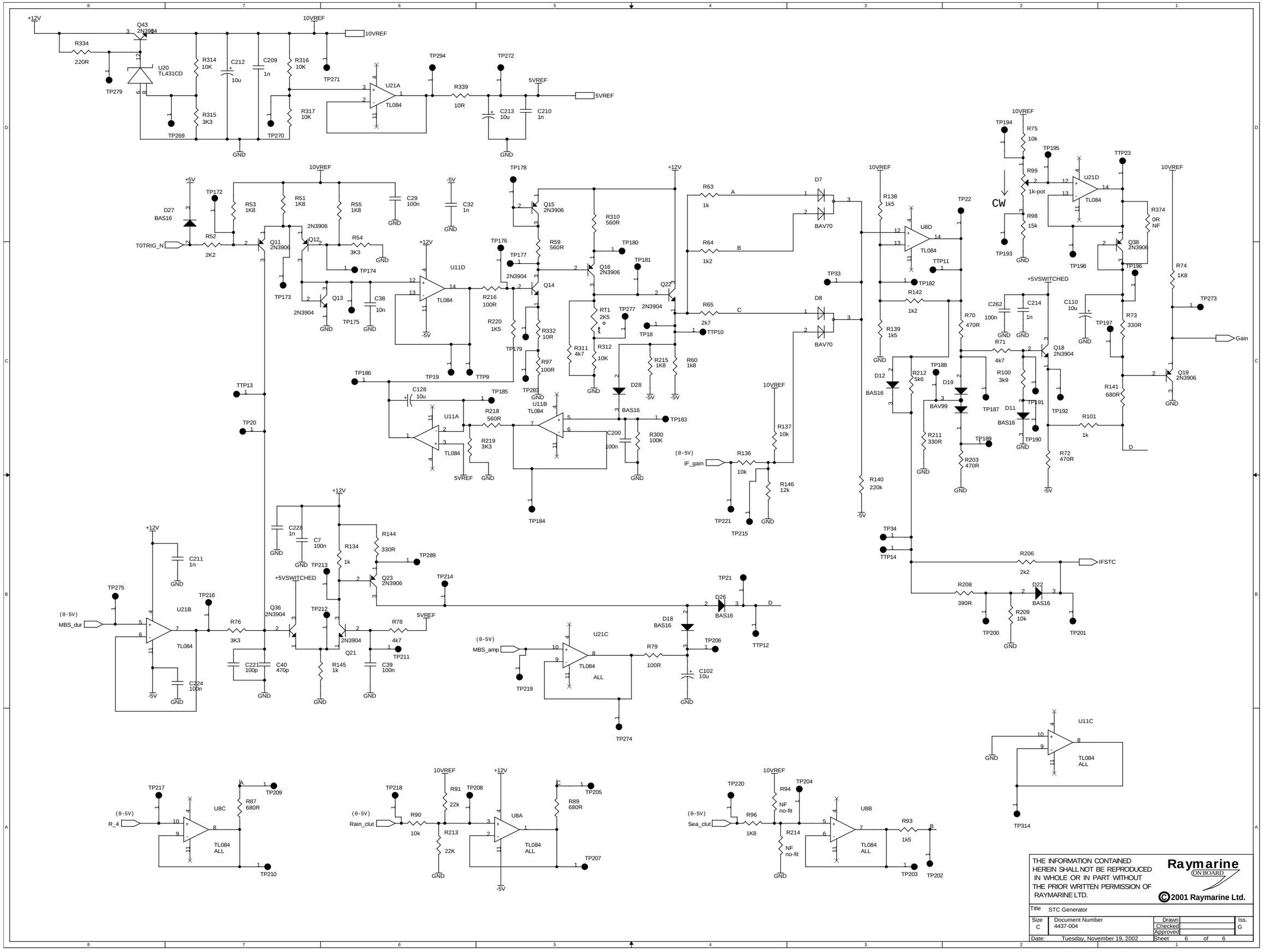


THE INFORMATION CONTAINED HEREIN SHALL NOT BE REPRODUCED IN WHOLE OR IN PART WITHOUT THE PRIOR WRITTEN PERMISSION OF RAYMARINE LTD.

Raymarine ON BOARD

©2001 Raymarine Ltd.

| | | | |
|---|---|---|---|
| Title | STC Generator | | |
| Size C | Document Number 4437-004 | Drawn / Checked / Approved | Iss. G |
| Date: Tuesday, November 19, 2002 | | Sheet 6 of 6 | |