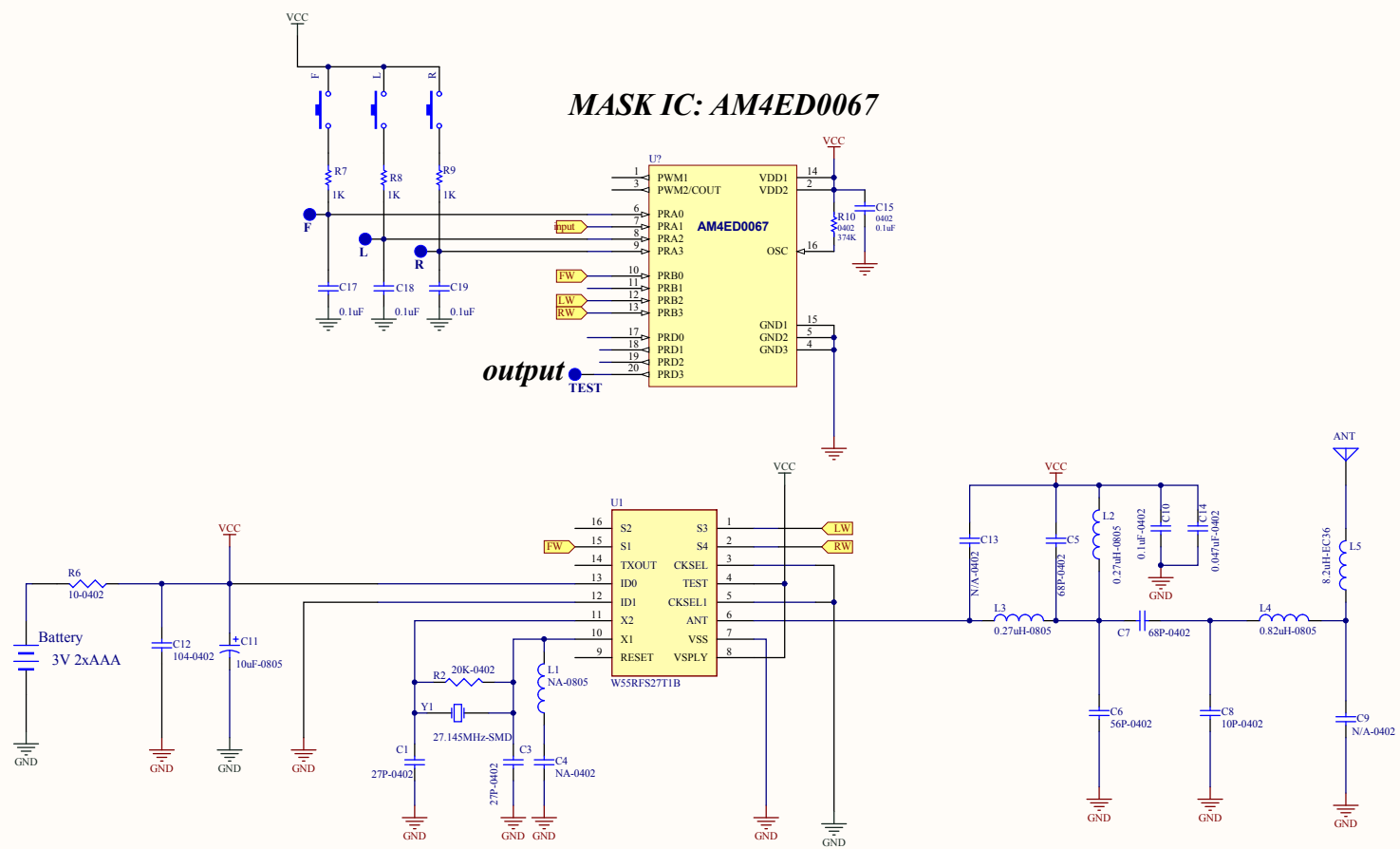

Standard Common part for master

Capacitor
(1st priority)

No:	Part Value	Qty for update SCH
1	10PF chip 50v +80-20% SMD 0603	
2	20pF chip 50v +80-20% SMD 0603	
3	25pF chip 50v +80-20% SMD 0603	
4	1000pF chip 50v +80-20% SMD 0603	
5	0.1uF chip 50V +80-20% Y5V, 50V SMD0603	
	0.1uF 25V +80-20% Y5V, PKG: Ceramic dia 6mm x 3.5	
6	0.033uF 25V,Y5V ,PKG: dia 4mm x 3.5	
7	10uF 25V +/-20% AL EL PKG:5x11mm	
8	47uF 25V +/-20% AL EL PKG:5x11mm	
9	100uF 25V +/-20% AL EL PKG:5x11mm	
10	220uF 25V +/-20% AL ELPKG:5x11mm	
Resistor:		
1	10 ohm +/-5% 0603	
2	100 ohm +/-5% 0603	
3	1K ohm +/-5% 0603	
4	4.7Kohm +/-5% 0603	
5	10k ohm +/-5% 0603	
6	47k ohm +/-5% 0603	
7	100kohm +/-5% 0603	
8	220k ohm +/-5% 0603	
9	1M ohm +/-5% 0603	
10	2.2M ohm +/-5% 0603	
Diode:		
1	IN4001PKG: DO-41 50V	
2	IN4148 PKG: DO-35 50V	
Transistor		
1	S8050DNPN (1.5A)SOT-23.V: 40; W: 0.3;	
2	S8550D PNP(1.5A)SOT-23.V: 40; W: 0.3;	
3	S9014D NPN (1.5A)SOT-23.V: 40; W: 0.3;	
4	B772 PNP A: 3; V: 40; Max. W: 1.25; PKG: TO-126;	
5	D882 NPN A: 3; V: 40; Max. W: 1.25; PKG: TO-126;	
Inductor		
1	Choke Coil DESC: 5.6uH 10% 1/2W	
PTC		
1	MF-R400-0-99	
Diode:		
1	1N5817: DO-41 50V	

Non Standard parts Guide Line (2nd priority)

Using E3 value for resistor, capacitor and inductor

Non Standard parts Guide Line (3rd priority)

Using E6 value for resistor, capacitor and inductor

MAPS All rights reserved

TEST MODE:	REMARKS:	IC information:	History:

Size: A3	Project Number: Y3154	Project Name: TILT N FLY DUSTY	Revision: R1
	MAPS Engineer: CHIN		
Date: 4/24/2013		Sheet 1 of 1	
File: Y3154 TX.SchDoc		DrawnBy: MingHua	