Rev.	Description	Date	Changed by
A	**Initial**	**Apr.12.10**	**lizhu**

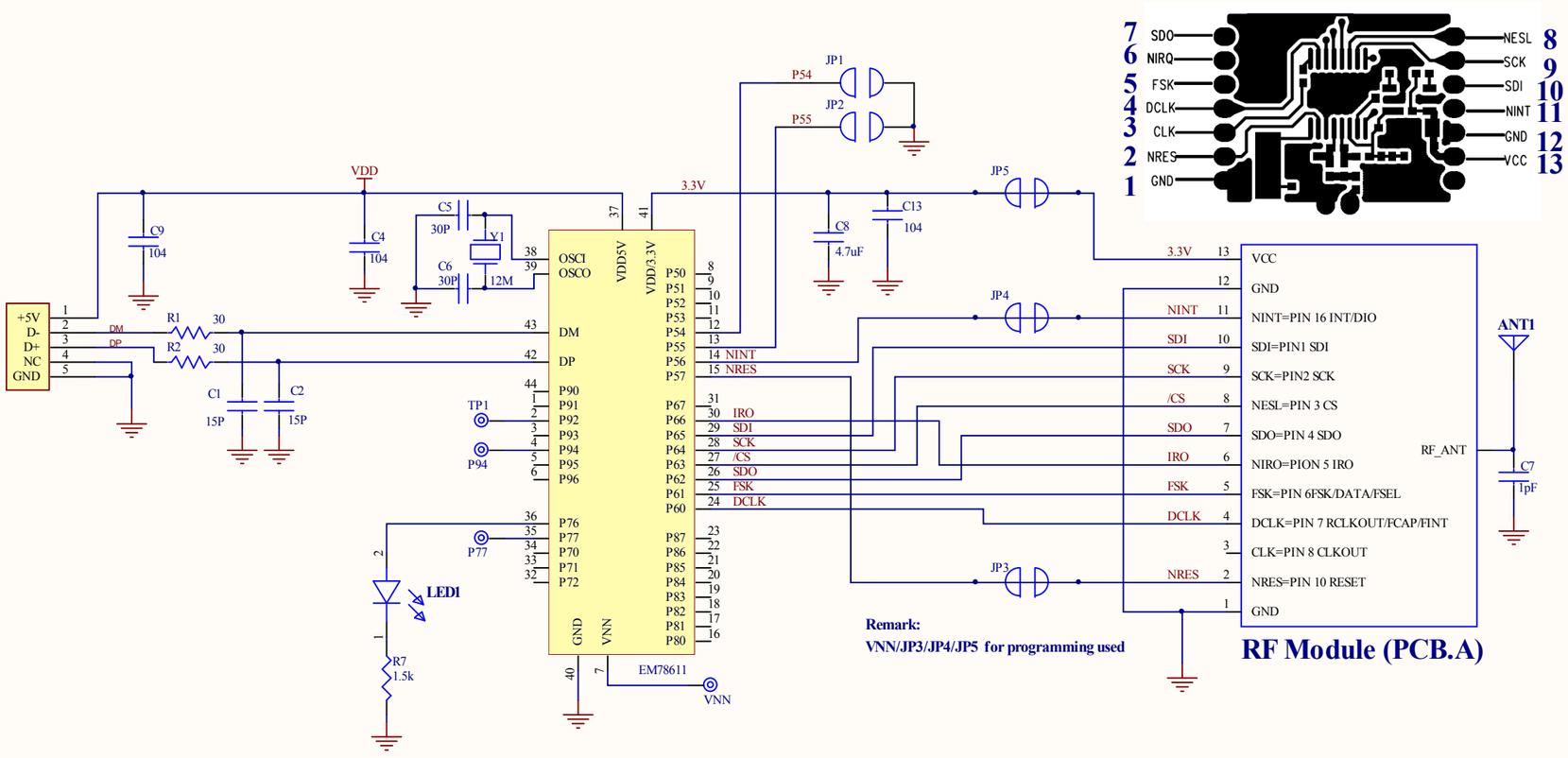

Distributed to SMT	Yes	✓
	No	

RADICA:
INNOVATIONS
A MEMBER OF RADICA GAMES GROUP

All design, operative and process data pertaining to the article shown on this sheet is the property of Radica China Ltd./Radica Games Ltd. This information is disclosed in confidence and is not to be copied, reproduced, revealed to or appropriated by others, in part or in whole, without the express consent of Radica China Ltd./Radica Games Ltd. This print is loaned and recipient covenants it will not be used in any manner detrimental to the interest of Radica China Ltd./Radica Games Ltd., and must be returned on demand.

Description:	Twitter Dog _ Dongle
Model No.:	T7004
Drawn by:	Date:
Checked by:	Date:
Approved by:	Date:
Sheet 1 of 1	Rev.: A
Drawing No.:	