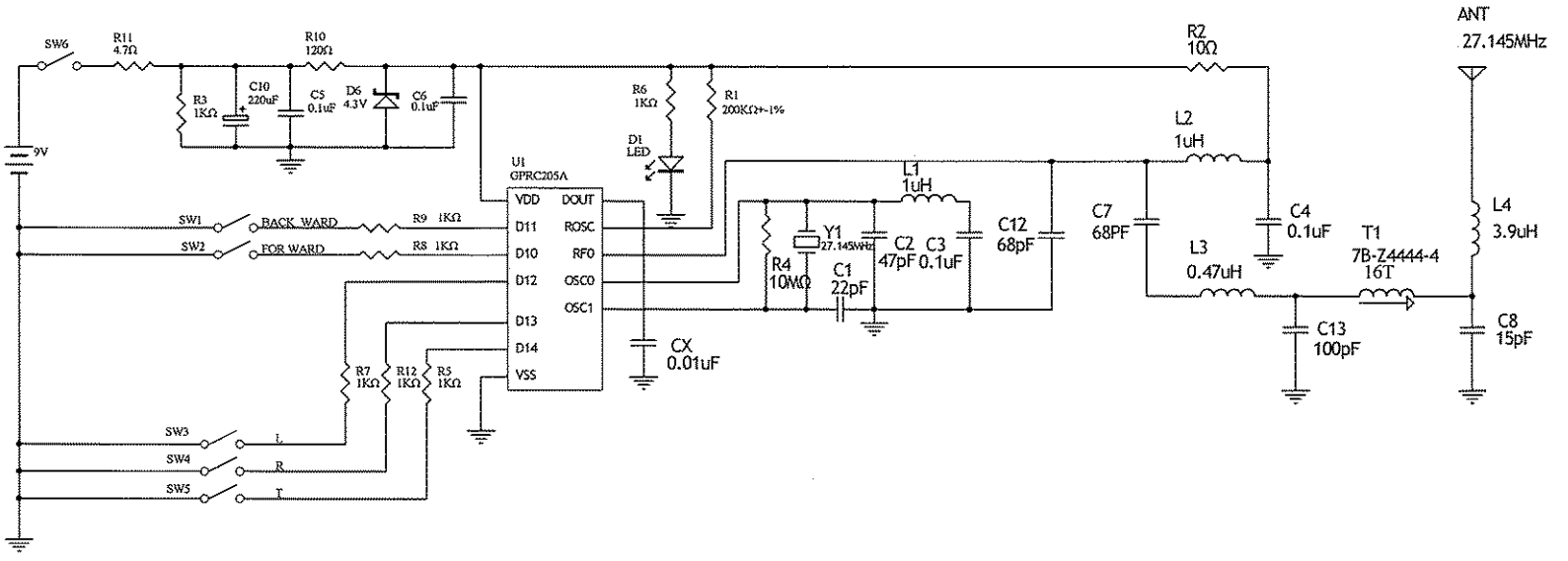

MODEL NAME:Terrainiac		COMPANY:Mattel
Size A4	MODEL Number: L5475	Revision 00
Date: 3-Mar-2007		Sheet 1 of 1
File: D:\ibpc42\Liu\123\L5465.DDB		Drawn By: