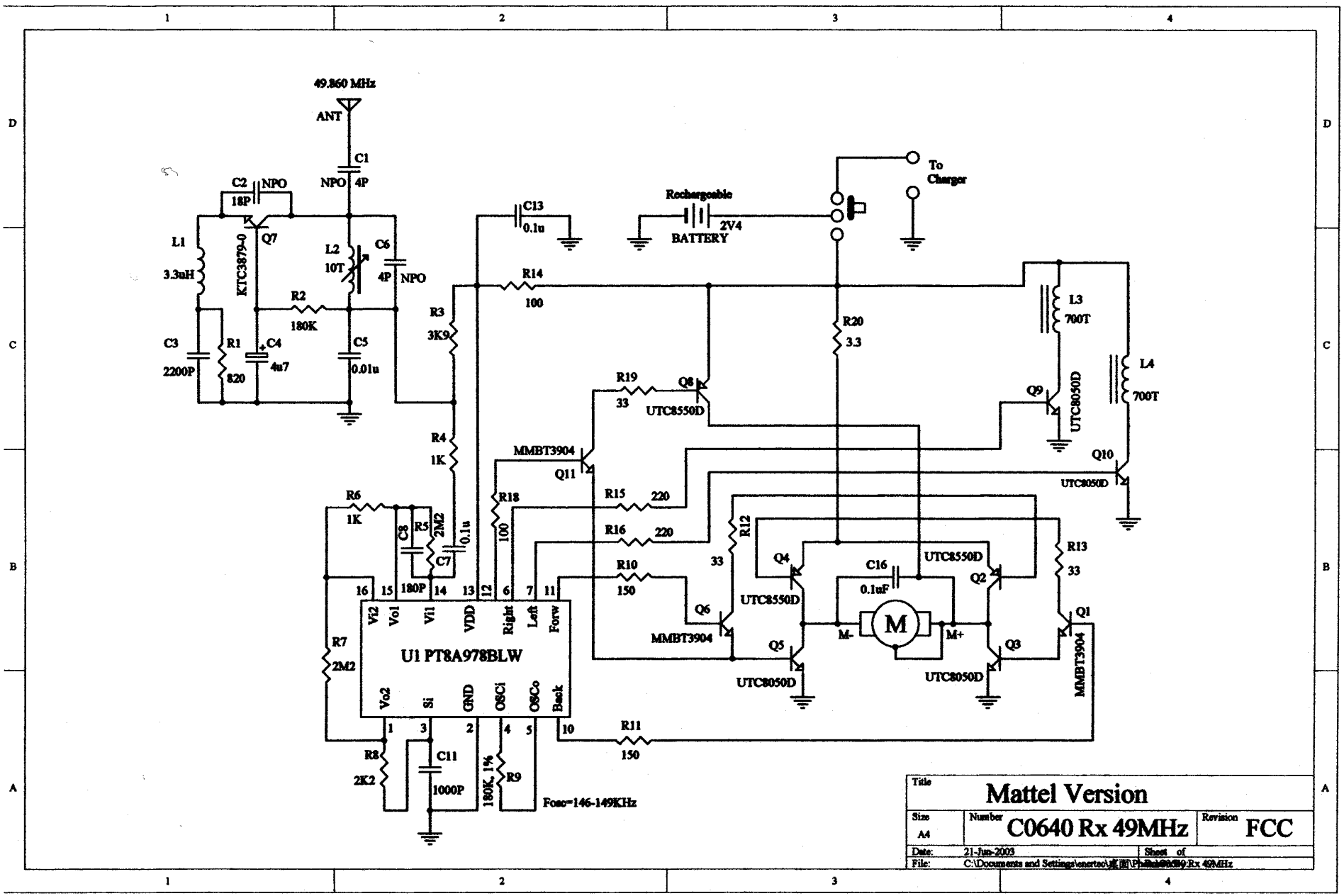
49.860 MHz
ANT
C1
NPO 4P
C2 NPO
18P
Q7
KTC3879-0
L1
3.3uH
L2
10T
C6
4P NPO
R2
180K
C3
2200P
R1
820
C4
4u7
C5
0.01u
C13
0.1u
R14
100
R3
3K9
R4
1K
Rechargeable
2V4
BATTERY
To
Charger
R20
3.3
L3
700T
L4
700T
Q9
UTC8050D
Q10
UTC8050D
R19
33
Q8
UTC8550D
MMBT3904
Q11
R18
100
R15
220
R16
220
R6
1K
C8
R5
2M2
C7
0.1u
180P
R12
33
Q4
UTC8550D
C16
0.1uF
UTC8550D
Q2
R13
33
Q1
MMBT3904
R10
150
Q6
MMBT3904
M-
M
M+
Q5
UTC8050D
Q3
UTC8050D
R7
2M2
U1 PT8A978BLW
Vf2
Vol
Vi1
VDD
Right
Left
Forw
Vo2
Si
GND
OSCi
OSCo
Back
R11
150
R8
2K2
C11
1000P
180K, 1%
R9
Fosc=146-149KHz
Title
Mattel Version
Size
A4
Number
C0640 Rx 49MHz
Revision
FCC
Date:
21-Jun-2003
Sheet of
File:
C:\Documents and Settings\enerteo\