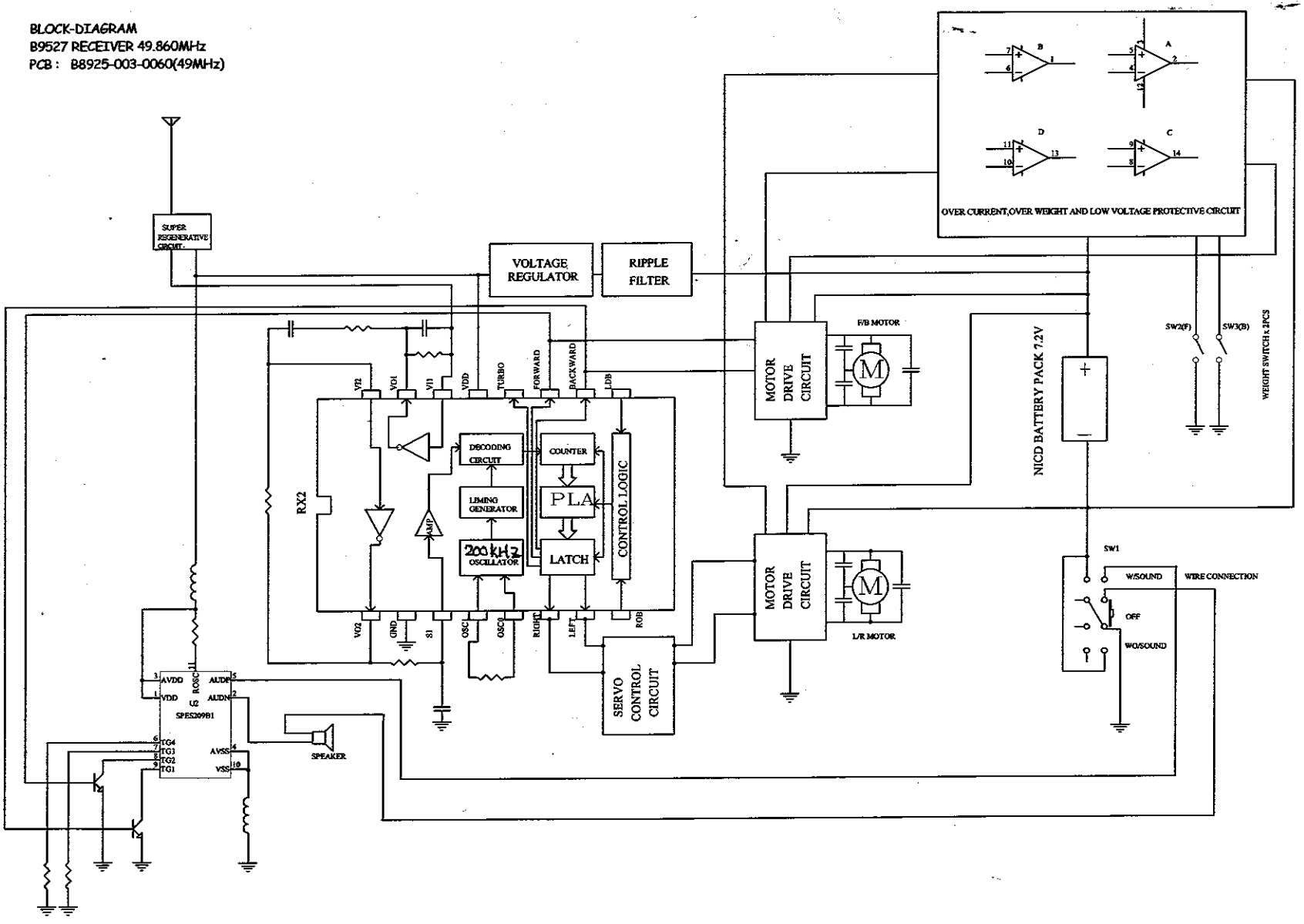BLOCK-DIAGRAM
B9527 RECEIVER 49.860MHz
PCB : B8925-003-0060(49MHz)