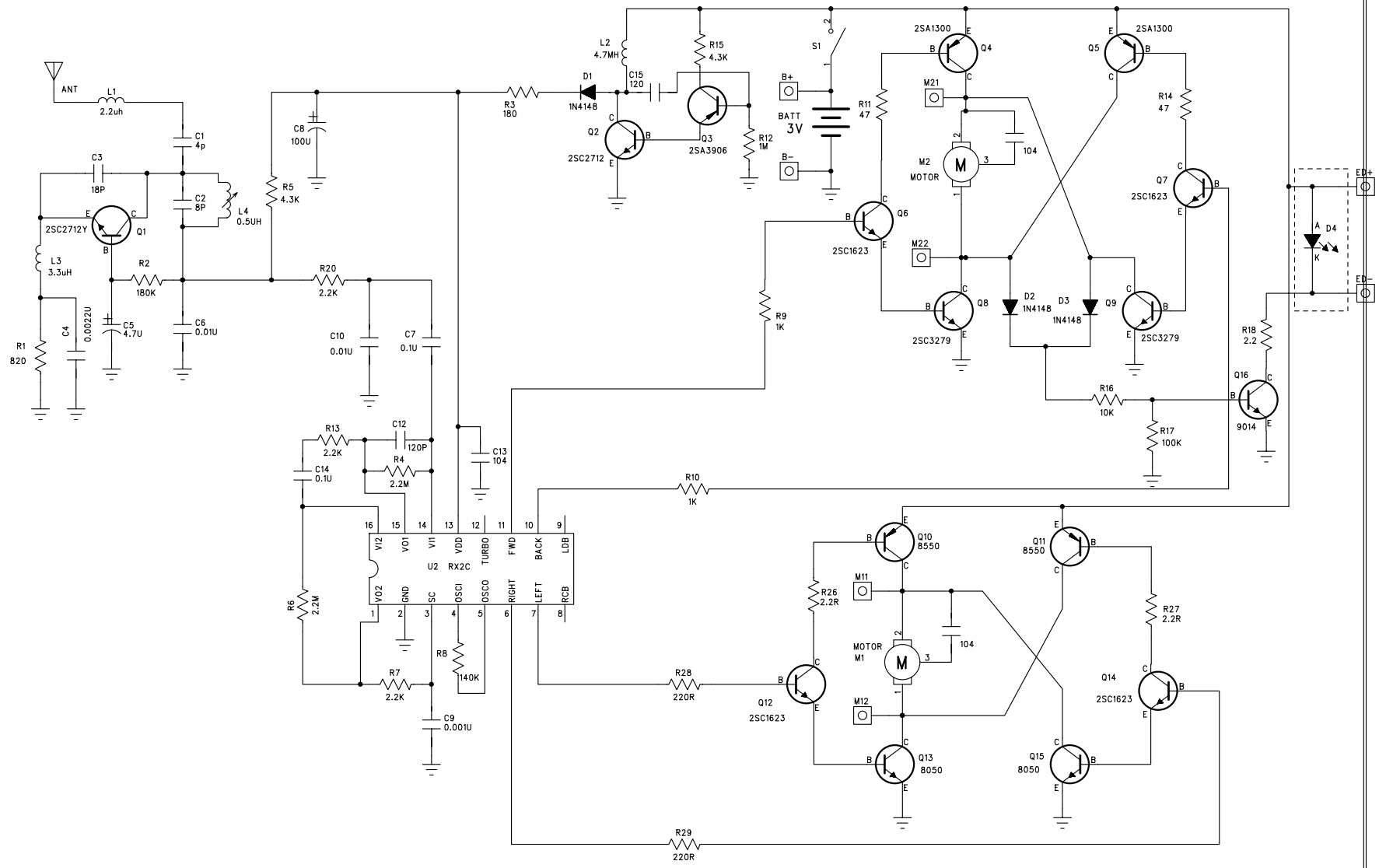

LUNG CHEONG	TITLE:	B5062 RX	DESIGN BY:	DRAWING BY:	APPROVED BY:	SHEET:
	FUNCTION:	FULL FUNCTION		Liu Ji Hong		1 of 1
	DWG NO:	DZ02-0B5062-01		05-19-2003		