BLOCK-DIAGRAM

B2219 TRANSMITTER 49.86M
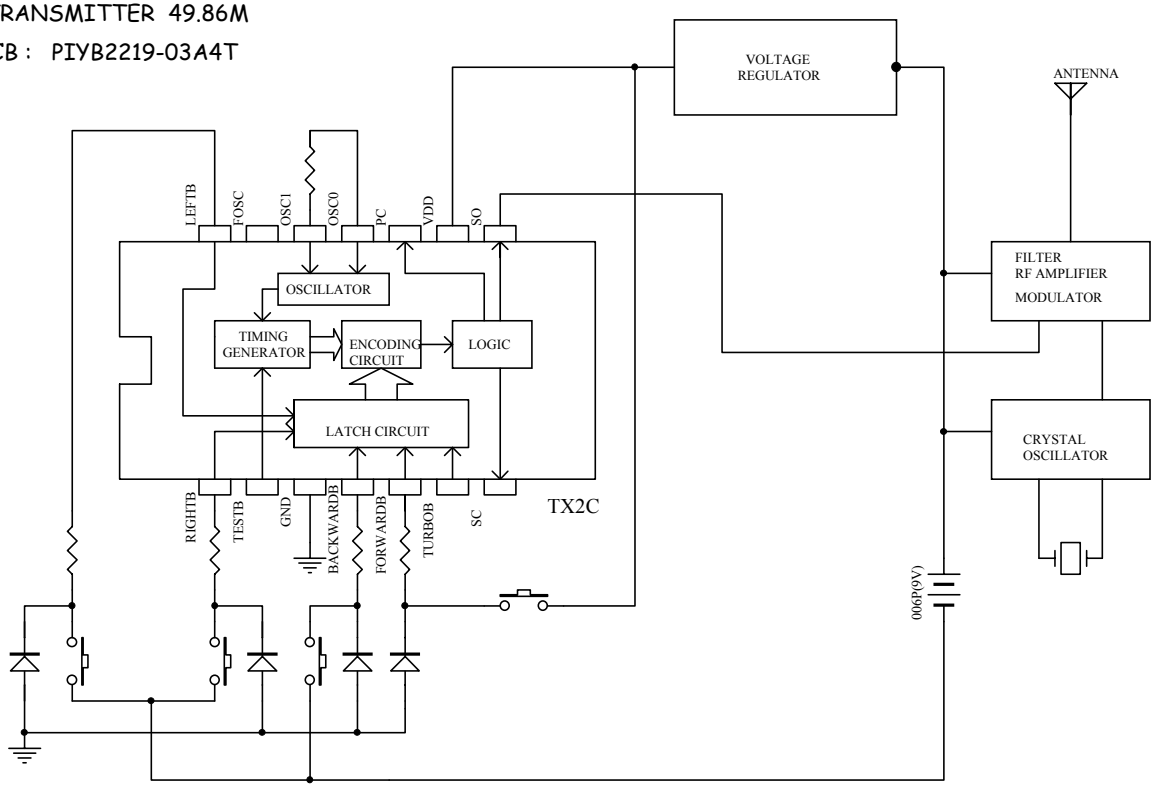
MAIN PCB : PIYB2219-03A4T