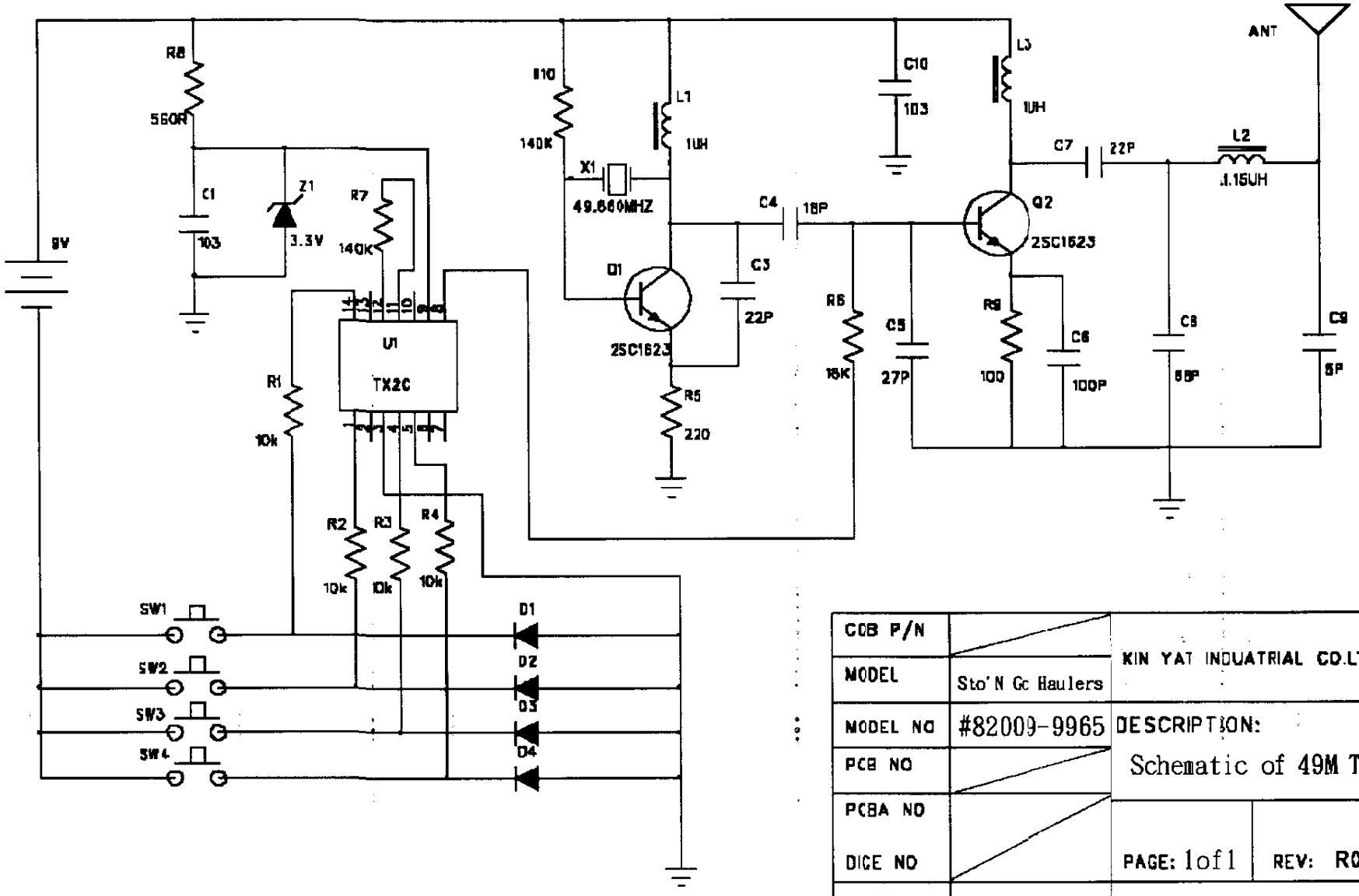

COB P/N		KIN YAT INDUATRIAL CO.LTD	
MODEL	Sto'N Go Haulers		
MODEL NO	#82009-9965	DESCRIPTION:	
PCB NO		Schematic of 49M TX	
PCBA NO			
DICE NO		PAGE: 1of1	REV: R0
DRAWN BY	TCNG	ISSUED DATE: 2002.06.12	